SINC MED

新克医疗

悦生活 · 享健康

地址：江苏省沭阳经济技术开发区瑞安路12号
电话：0527-89995088
网址：www.sincmed.com
Email：qhb@sincmed.com

SINC MEDICAL
新克医疗

医用无油空气压缩泵领域完整解决方案领航者

THE LEADING PROVIDER IN THE OILLESS AIR COMPRESSOR PUMP FIELD TO INTEGRATE SOLUTION

2018

江苏新克医疗器械有限公司

SINC Medical Device Co., Ltd

质量方针

Quality Policy

坚持质量第一原则，为客户提供最优质满意的服务

SINC Medical is adhere to the principle of Quality First,
To provide customers with the most satisfactory service.

CONTENTS

目 录

1 企业简介 Company Profile

2 产品概述 Product Overview

3 200系列产品 200 Series

4 300系列产品 300 Series

5 400系列产品 400 Series

6 500系列产品 500 Series

江苏新克医疗器械有限公司

SINC Medical Device Co., Ltd.

企业简介

江苏新克医疗器械有限公司坐落在风景优美、交通便利的江苏沭阳国家级经济技术开发区。

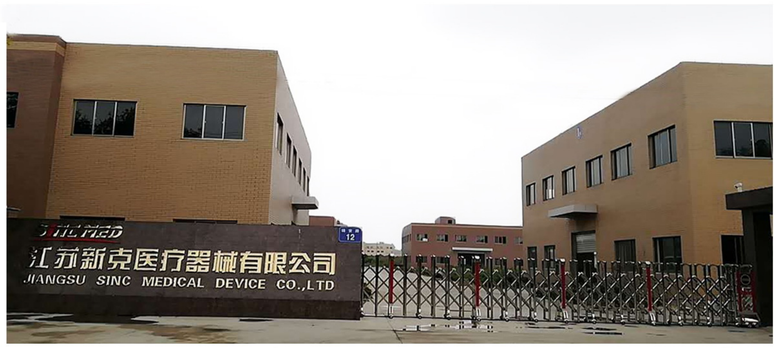

公司主要从事于医用无油空气压缩泵的研发与生产。公司推崇科技创新理念，在设计开发方面，拥有强大的新产品开发力量，有很高的自行设计能力及设计水平，具备强有力的专业开发能力，从泵的心脏电机到泵的整体设计都经过专业的论证和测试，产品先后通过ETL、CE等认证，达到国内领先的质量水准。

在医用无油空气压缩泵领域内，可根据客户的不同需求提供完整的解决方案。

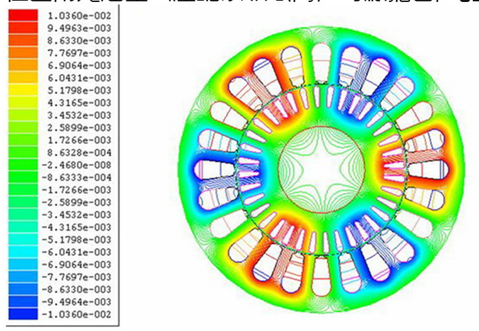

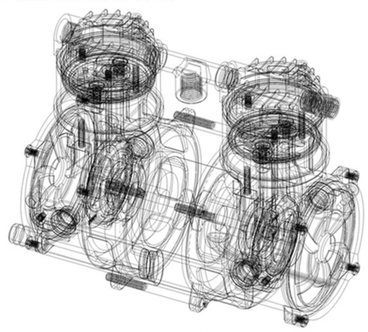

公司按照《ISO 9001：2015 质量管理体系》的标准要求，对开发生产、质量保证、生产服务进行标准化管理，以质量求生产，向管理求效益。

在生产管理上，严格按照标准要求，每个生产环节全部设有严格的操作规范，公司视产品质量为“企业的生命”,本着“质量是生命，管理创效益”的理念，不断追求高品质的产品质量和高效率的生产管理。

随着内进气式压缩泵在制氧机上成功应用后，在过去10年与知名制氧机厂商共同引领了制氧机技术的不断革新。新克医疗也积极与国内知名的制氧机厂商进行合作和技术交流，不断技术创新，一起开拓国际市场。

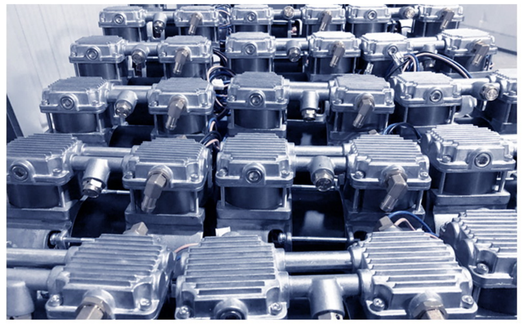

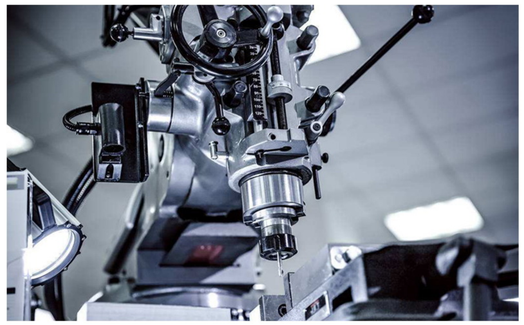

Company Profiles

SINC medical located in the beautiful, convenient transportation area ,Jiangsu Shuyang Economic and Technology Development Zone, it is mainly engaged in the development and production of medical oilless air compressor pump.SINC holds in esteem the ideas of technology innovation, It has strong ability of new product development self-design and high level,The whole design of the pump, from the motor to the pump, has been professionally demonstrated and tested. The product has been certified by ETL/CE and has reached the leading quality level in China.

In the field of medical oilfree air compression pump, can provide integrate solution to customers' different requirements.

Compliance with ISO 9001: 2015 Quality Management System, SINC implements standardized management on development production, quality assurance and production service.

In production management, SINC sets strict operation procedure in every production process in accordance with standards requirements.SINC regards product quality as its life, based on the idea of 'Quality is Life, Management creates Benefit' ,constant pursuit of high quality and high efficiency management.

合作伙伴
CUSTOMER

QUALITY OF LIFE
FOR GOD USER

ZGK系列
无油 空气压缩泵的特点

ZGK SERIES
Features of oilless air compressor pump

- 无油运行(清洁气流，维护更少)
  Oilless operation (Clean air stream, less maintenance)
- 永久润滑轴承(最佳使用寿命)
  Permanently lubricated bearings (Optimum life)
- 高性能活塞密封(最佳使用寿命)
  High performance piston seal (Optimum life)
- 压铸铝部件(坚固、轻便、耐用)
  Die-cast aluminum components (Strong, lightweight, durable)
- 薄壁气缸(最大传热)
  Thin wall, hard coated aluminum cylinder (Maximum heat transfer)
- 动态平衡(低工作振动)
  Dynamically balanced (Low operating vibration)
- 双头气缸(气流稳定)
  Twin headed rock piston (Stable air flow)
- 通过RoHS认证(绿色环保)
  RoHS compliant (Green, eco-friendly)

产品资质

Qualification of Products

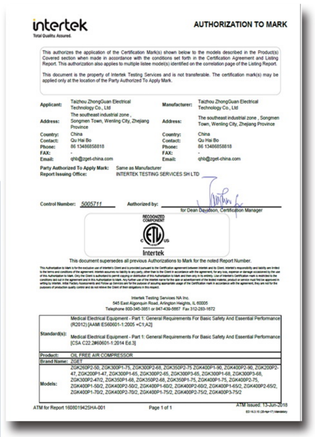

intertek
Total Quality Assured.

AUTHORIZATION TO MARK

This authorizes the application of the Certification Mark(s) shown below to the models described in the Product(s) Covered section when made in accordance with the conditions set forth in the Certification Agreement and Listing Report. This authorization also applies to multiple listee model(s) identified on the correlation page of the Listing Report.

This document is the property of Intertek Testing Services and is not transferable. The certification mark(s) may be applied only at the location of the Party Authorized To Apply Mark.

Applicant: Taizhou ZhongGuan Electrical Technology Co., Ltd
The southeast industrial zone _ Songmen Town, Wenling City, Zhejiang Province
Country: China
Contact: Qu Hai Bo
Phone: 86 13400501818
FAX:
Email: qhb@zgel-china.com

Manufacturer: Taizhou ZhongGuan Electrical Technology Co., Ltd
The southeast industrial zone _ Songmen Town, Wenling City, Zhejiang Province
Country: China
Contact: Qu Hai Bo
Phone: 86 13400501818
FAX:
Email: qhb@zgel-china.com

Party Authorized To Apply Mark: Same as Manufacturer
Report Issuing Office: INTERTEK TESTING SERVICES SH LTD

Control Number: 4005711 Authorized by: for Dean Dugallon, Certification Manager

Intertek

This document supersedes and previous Authorizations to Mark for the noted Report Number

Intertek Testing Services NA Inc.
545 East Algonquin Road, Arlington Heights, IL 60005
Telephone 800-345-3851 or 847-439-3851 Fax 312-283-1672

Standard(s):	Medical Electrical Equipment - Part 1: General Requirements For Basic Safety And Essential Performance (R2012) (IA)AMI ES60601-1:2005 +C1:A2)
	Medical Electrical Equipment - Part 1: General Requirements For Basic Safety And Essential Performance (CSA C22.2#60601-1:2014 Ed.3)
Product:	OIL FREE AIR COMPRESSOR
Brand Name:	ZGK
Models:	ZGK250P2-05, ZGK300P1-75, ZGK300P2-65, ZGK350P2-70 ZGK400P1-90, ZGK400P2-80, ZGK350P2-47, ZGK350P1-47, ZGK300P1-65, ZGK300P2-65, ZGK300P1-55, ZGK300P1-68, ZGK300P1-48, ZGK300P2-65, ZGK350P1-68, ZGK350P2-68, ZGK350P1-75, ZGK400P1-75, ZGK400P2-75, ZGK400P2-50/2, ZGK400P1-60/2, ZGK400P2-60/2, ZGK400P1-65/2, ZGK400P2-65/2, ZGK400P1-75/2, ZGK400P2-75/2, ZGK450P1-75/2, ZGK450P2-75/2, ZGK450P3-75/2

ATM for Report 100501942SHA-001 Page 1 of 1 ATM Issued: 19-Jun-2018
EU ALL-in-One-1 (Generic)

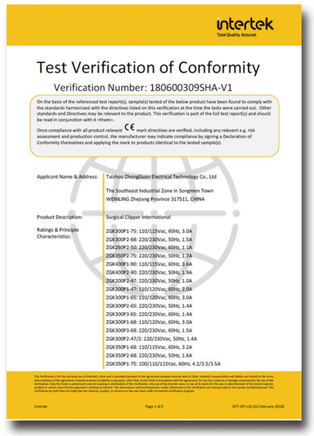

intertek
Total Quality Assured.

Test Verification of Conformity
Verification Number: 180600309SHA-V1

On the basis of the referenced test report(s), sample(s) tested of the below product have been found to comply with the standards harmonized with the directives listed on this verification at the time the tests were carried out. Other standards and Directives may be relevant to the product. This verification is part of the full test report(s) and should be read in conjunction with it <Here>.

Once compliance with all product relevant CE directives are verified, including any relevant e.g. risk assessment and production control, the manufacturer may indicate compliance by signing a Declaration of Conformity themselves and applying the mark to products identical to the tested sample(s).

Applicant Name & Address: Taizhou ZhongGuan Electrical Technology Co., Ltd
The Southeast Industrial Zone in Songmen Town
WENLING Zhejiang Province 317511, CHINA

Product Description: Surgical Clipper International

Ratings & Principle Characteristics:
ZGK300P1-75: 110/115Vac, 60Hz, 3.0A
ZGK300P2-68: 220/230Vac, 50Hz, 1.5A
ZGK350P2-50: 220/230Vac, 60Hz, 1.1A
ZGK350P1-75: 220/230Vac, 50Hz, 1.7A
ZGK400P1-90: 110/115Vac, 60Hz, 3.6A
ZGK400P2-80: 220/230Vac, 50Hz, 1.9A
ZGK300P2-80: 220/230Vac, 50Hz, 1.4A
ZGK300P1-47: 110/120Vac, 60Hz, 2.0A
ZGK300P1-65: 110/120Vac, 60Hz, 3.0A
ZGK300P2-65: 220/230Vac, 50Hz, 1.4A
ZGK300P2-65: 220/230Vac, 60Hz, 1.4A
ZGK300P1-68: 110/120Vac, 60Hz, 3.0A
ZGK300P2-68: 220/230Vac, 60Hz, 1.5A
ZGK300P2-47/2: 220/230Vac, 50Hz, 1.4A
ZGK350P1-68: 110/115Vac, 60Hz, 3.2A
ZGK350P2-68: 220/230Vac, 50Hz, 1.6A
ZGK350P1-75: 100/110/115Vac, 60Hz, 4.2/3.5/3.5A

The Verification is for the volume use of Intertek's clients and is provided pursuant to the agreement between Intertek and its Client. Intertek's responsibility and liability are limited to the terms and conditions of the agreement. Intertek assumes no liability to any party, other than to the Client in accordance with the agreement, for any loss, expense or damage occasioned by the use of this Verification for any purpose not agreed to in writing by Intertek. The observations and test/inspection results referenced in this Verification are relevant only to the sample tested/inspected. This Verification by itself does not imply that the material, product, or service is or has ever been under an Intertek certification program.

Intertek Page 1 of 2 QFT-OP-116-(13 February 2018)

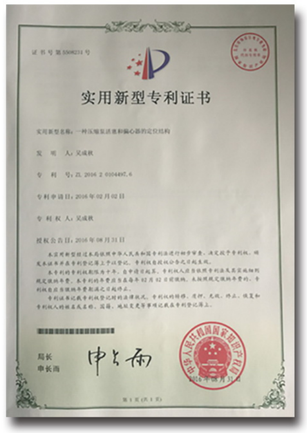

证书号第5506231号

实用新型专利证书

发明人：吴成跃

专利号：ZL 2014 2 0004497.4

专利申请日：2014年02月02日

授权公告日：2016年08月31日

局长 申长雨

证书号第5506231号

实用新型专利证书

发明人：吴成跃

专利号：ZL 2014 2 0004497.4

专利申请日：2014年02月02日

授权公告日：2016年08月31日

局长 申长雨

ETL CE 专利/Patents

ZGK200P SERIES

AIR COMPRESSOR

ZGK200P系列

OIL-LESS

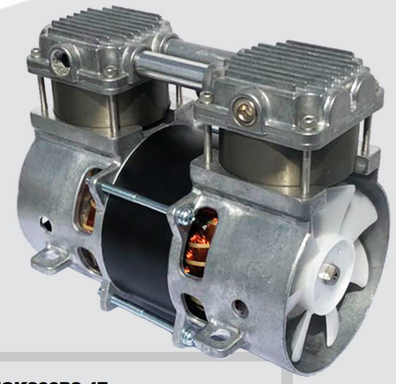

ZGK200P-47(A)

Technical Data

Model Number	ZGK200P1-47	ZGK200P2-47
Performance Data		
Head configuration	Pressure parallel flow	Pressure parallel flow
Nominal voltage/frequency	110V/60Hz/1	220V/50Hz/1
Current at rated load	2.2 A	1.1 A
Power at rated load	220 W	210 W
Flow at rated load	47 L/min	47 L/min
Pressure at rated load	20 PSI (1.4 bar)	20 PSI (1.4 bar)
Speed at rated load	1650 rpm	1400 rpm
Noise	<55 dB(A)	<55 dB(A)
Maximum pressure restart	0 PSI	0 PSI
Electrical Data		
Motor type [Capacitance]	P.S.C(14uF)	P.S.C(6.5uF)
Motor insulation class	B	B
Thermal switch [Open temperature]	Thermally protected (145℃)	Thermally protected (145℃)
Line lead wire color, gauge	White(hot), black(neutral), 18 AWG	Brown(hot), blue(neutral), 18 AWG
Capacitor lead wire color, gauge	Blue, blue, 18 AWG	Black, black, 18 AWG
General Data		
Operating ambient air temperature	50° to 104°F (10° to 40℃)	50° to 104°F (10° to 40℃)
Safety certification	ETL	ETL
Net weight	4.0 Kg	4.0 Kg

※可按照需求提供其它电压及性能配置

Other voltages and configurations available upon request

Exploded Drawing

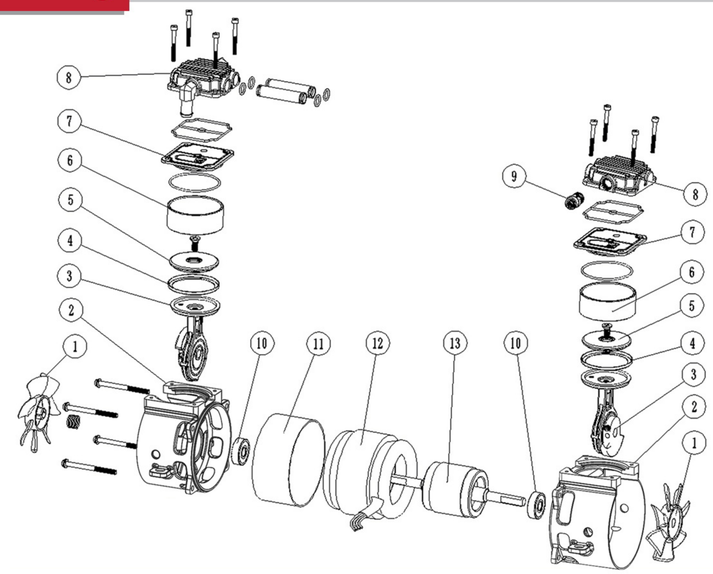

1.风扇 fan
2.箱体 housing
3.连杆 connecting rod
4.皮碗cup seal
5.皮碗压盖 cup seal gland
6.缸套cylinder liner
7.阀板valve plate
8.缸盖 cylinder cover
9.安全阀 relief valve
10.轴承 bearing
11.电机筒 motor casing
12.定子 stator
13.转子 rotor

Performance Chart

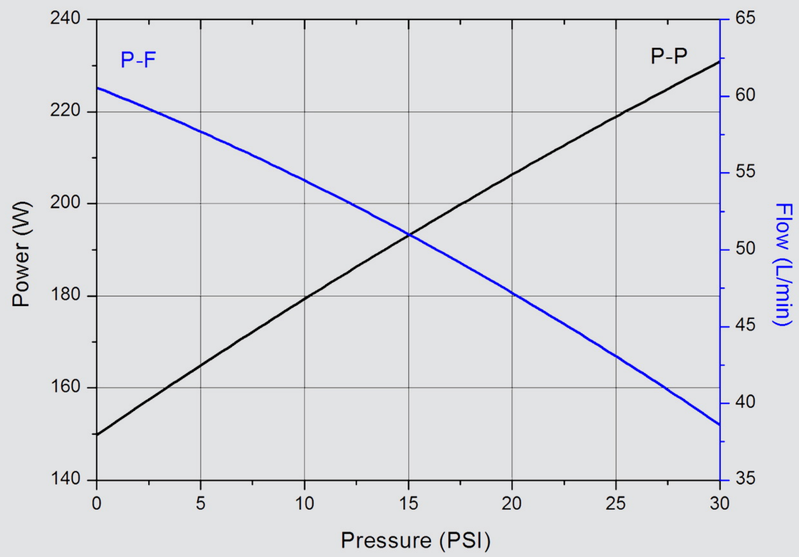

Dimensions

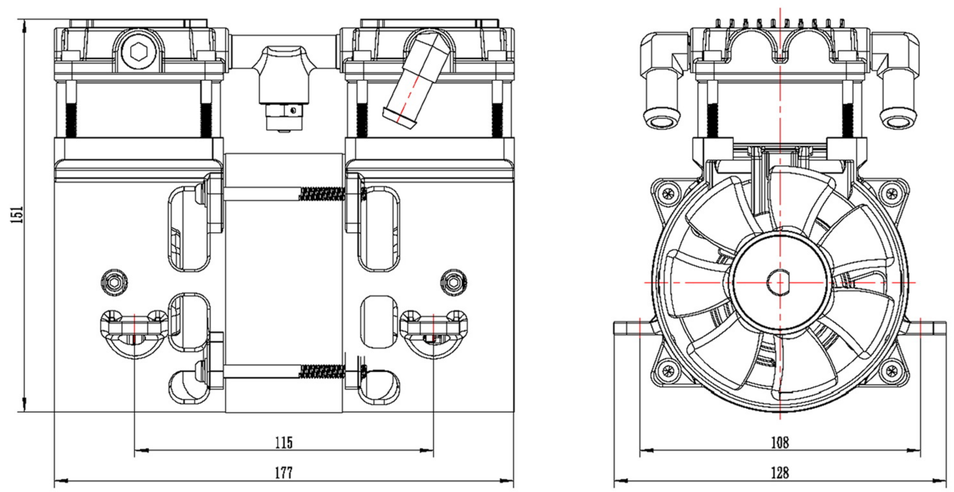

ZGK200P SERIES

AIR COMPRESSOR

ZGK200P系列

OIL-LESS

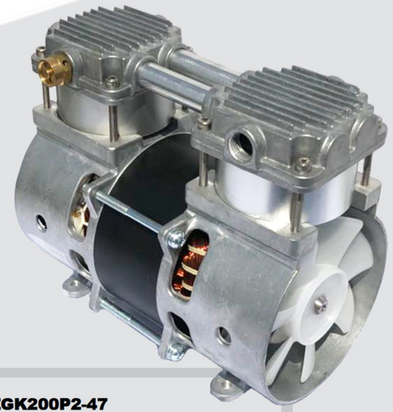

ZGK200P-47(B)

Technical Data

Model Number	ZGK200P1-47	ZGK200P2-47
Performance Data		
Head configuration	Pressure parallel flow	Pressure parallel flow
Nominal voltage/frequency	110V/60Hz/1	220V/50Hz/1
Current at rated load	2.2 A	1.1 A
Power at rated load	220 W	210 W
Flow at rated load	47 L/min	47 L/min
Pressure at rated load	20 PSI (1.4 bar)	20 PSI (1.4 bar)
Speed at rated load	1650 rpm	1400 rpm
Noise	<55 dB(A)	<55 dB(A)
Maximum pressure restart	0 PSI	0 PSI
Electrical Data		
Motor type [Capacitance]	P.S.C(14uF)	P.S.C(6.5uF)
Motor insulation class	B	B
Thermal switch [Open temperature]	Thermally protected (145℃)	Thermally protected (145℃)
Line lead wire color, gauge	White(hot), black(neutral), 18 AWG	Brown(hot), blue(neutral), 18 AWG
Capacitor lead wire color, gauge	Blue, blue, 18 AWG	Black, black, 18 AWG
General Data		
Operating ambient air temperature	50° to 104°F (10° to 40℃)	50° to 104°F (10° to 40℃)
Safety certification	ETL	ETL
Net weight	4.0 Kg	4.0 Kg

※可按照需求提供其它电压及性能配置

Other voltages and configurations available upon request

Exploded Drawing

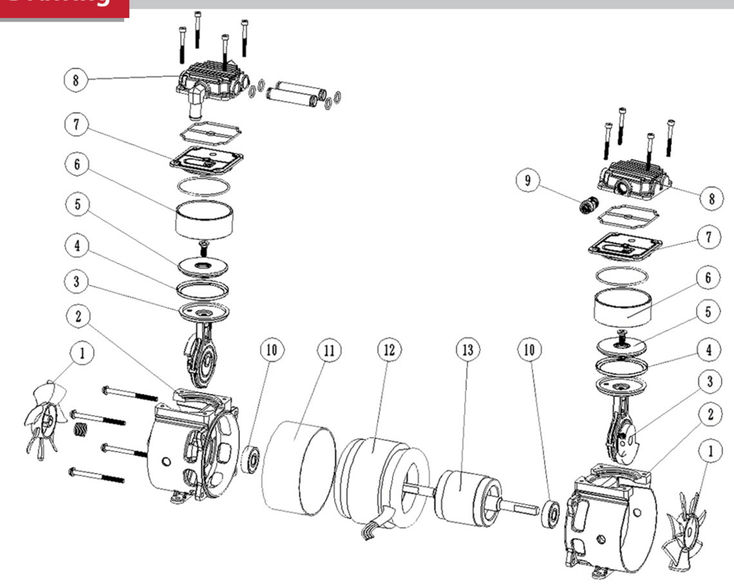

1.风扇 fan
2.箱体 housing
3.连杆 connecting rod
4.皮碗cup seal
5.皮碗压盖 cup seal gland
6.缸套cylinder liner
7.阀板valve plate
8.缸盖 cylinder cover
9.安全阀 relief valve
10.轴承 bearing
11.电机筒 motor casing
12.定子 stator
13.转子 rotor

Performance Chart

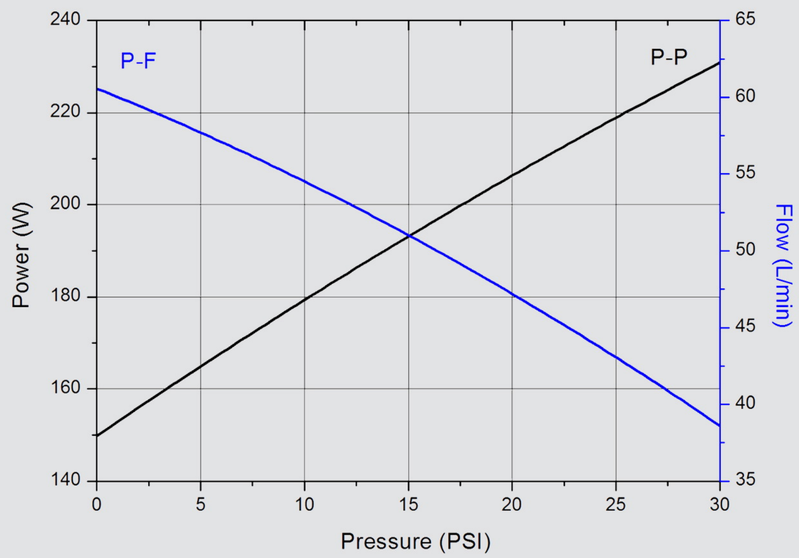

Dimensions

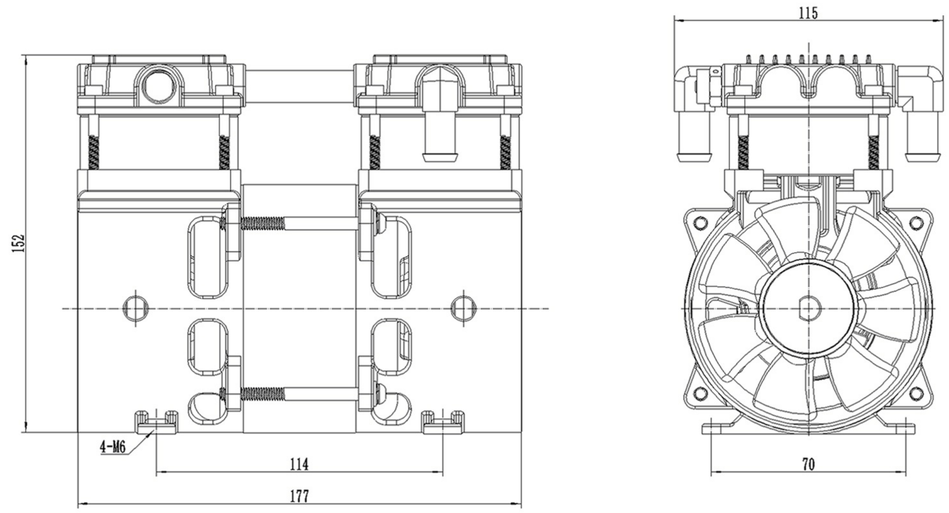

ZGK200P SERIES

AIR COMPRESSOR

ZGK200P系列

OIL-LESS

ZGK200P-47(C)

Technical Data

Model Number	ZGK200P1-47	ZGK200P2-47
Performance Data		
Head configuration	Pressure parallel flow	Pressure parallel flow
Nominal voltage/frequency	110V/60Hz/1	220V/50Hz/1
Current at rated load	2.2 A	1.1 A
Power at rated load	220 W	210 W
Flow at rated load	47 L/min	47 L/min
Pressure at rated load	20 PSI (1.4 bar)	20 PSI (1.4 bar)
Speed at rated load	1650 rpm	1400 rpm
Noise	<55 dB(A)	<55 dB(A)
Maximum pressure restart	0 PSI	0 PSI
Electrical Data		
Motor type [Capacitance]	P.S.C(14uF)	P.S.C(6.5uF)
Motor insulation class	B	B
Thermal switch [Open temperature]	Thermally protected (145℃)	Thermally protected (145℃)
Line lead wire color, gauge	White(hot), black(neutral), 18 AWG	Brown(hot), blue(neutral), 18 AWG
Capacitor lead wire color, gauge	Blue, blue, 18 AWG	Black, black, 18 AWG
General Data		
Operating ambient air temperature	50° to 104°F (10° to 40℃)	50° to 104°F (10° to 40℃)
Safety certification	ETL	ETL
Net weight	4.0 Kg	4.0 Kg

※可按照需求提供其它电压及性能配置

Other voltages and configurations available upon request

Exploded Drawing

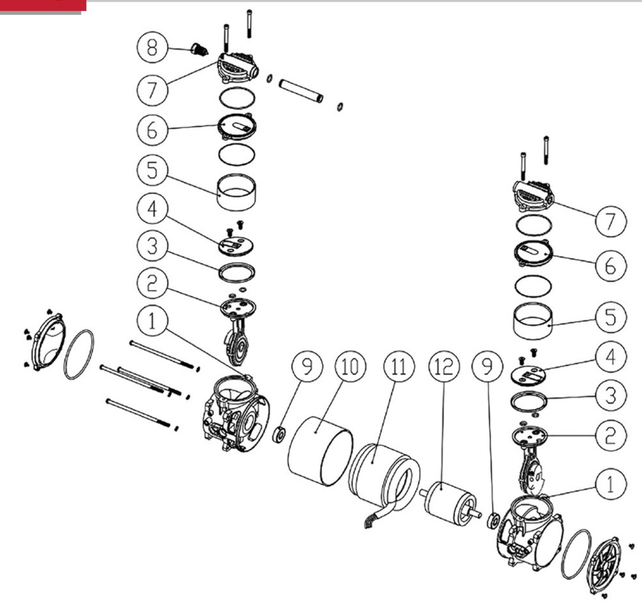

1.箱体 housing
2.连杆 connecting rod
3.皮碗cup seal
4.皮碗压盖 cup seal gland
5.缸套 cylinder liner
6.阀板 valve plate
7.缸盖 cylinder cover
8.安全阀 relief valve
9.轴承 bearing
10.电机筒 motor casing
11.定子 stator
12.转子 rotor

Performance Chart

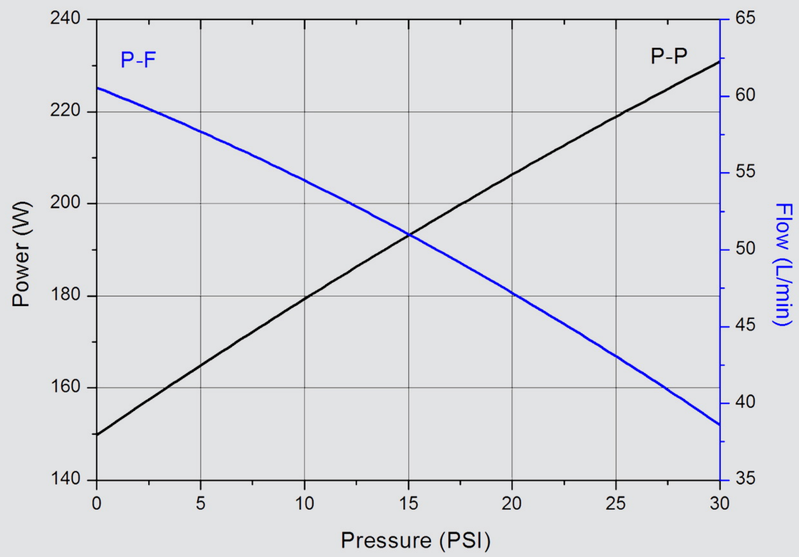

Dimensions

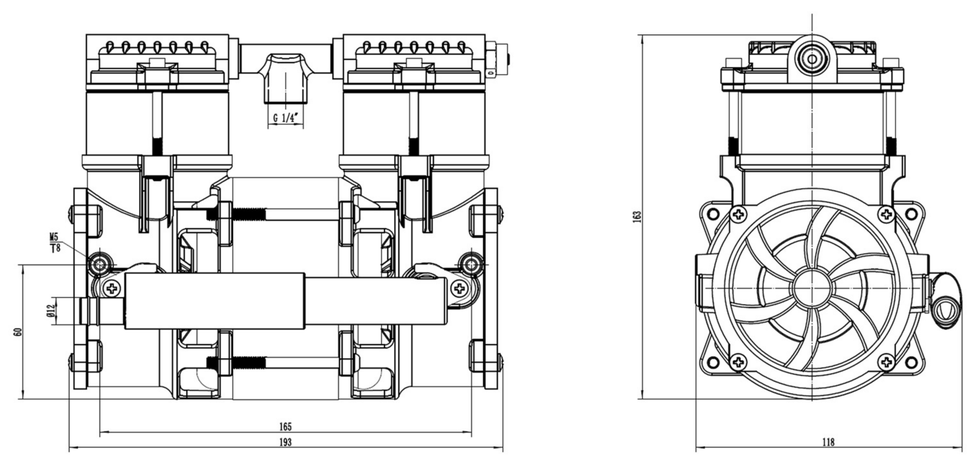

ZGK300P SERIES

AIR COMPRESSOR

ZGK300P系列

OIL-LESS

ZGK260P-50

Technical Data

Model Number	ZGK260P1-50	ZGK260P2-50
Performance Data		
Head configuration	Pressure parallel flow	Pressure parallel flow
Nominal voltage/frequency	110V/60Hz/1	220V/50Hz/1
Current at rated load	2.4 A	1.2 A
Power at rated load	240 W	230 W
Flow at rated load	50 L/min	50 L/min
Pressure at rated load	20 PSI (1.4 bar)	20 PSI (1.4 bar)
Speed at rated load	1650 rpm	1400 rpm
Noise	<55 dB(A)	<55 dB(A)
Maximum pressure restart	0 PSI	0 PSI
Electrical Data		
Motor type [Capacitance]	P.S.C(15uF)	P.S.C(5uF)
Motor insulation class	B	B
Thermal switch [Open temperature]	Thermally protected (145℃)	Thermally protected (145℃)
Line lead wire color, gauge	White(hot), black(neutral), 18 AWG	Brown(hot), blue(neutral), 18 AWG
Capacitor lead wire color, gauge	Blue, blue, 18 AWG	Black, black, 18 AWG
General Data		
Operating ambient air temperature	50° to 104°F (10° to 40℃)	50° to 104°F (10° to 40℃)
Safety certification	ETL	ETL
Net weight	4.2 Kg	4.2 Kg

※可按照需求提供其它电压及性能配置

Other voltages and configurations available upon request

Performance Chart

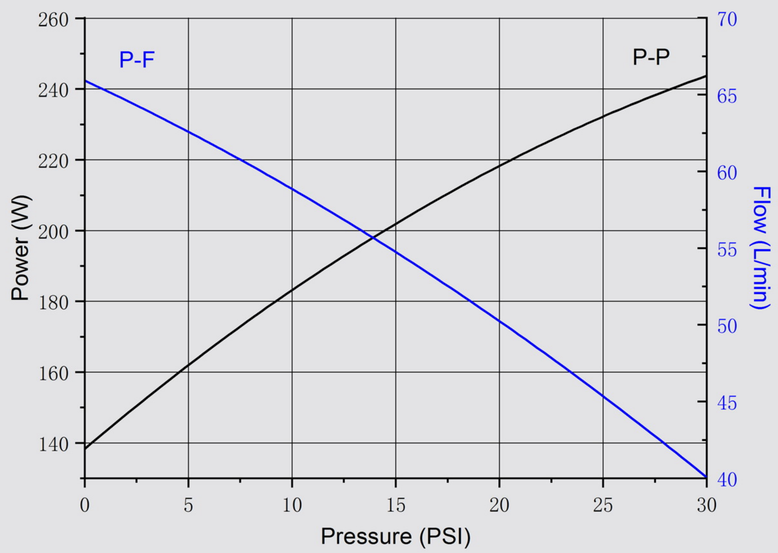

Exploded Drawing

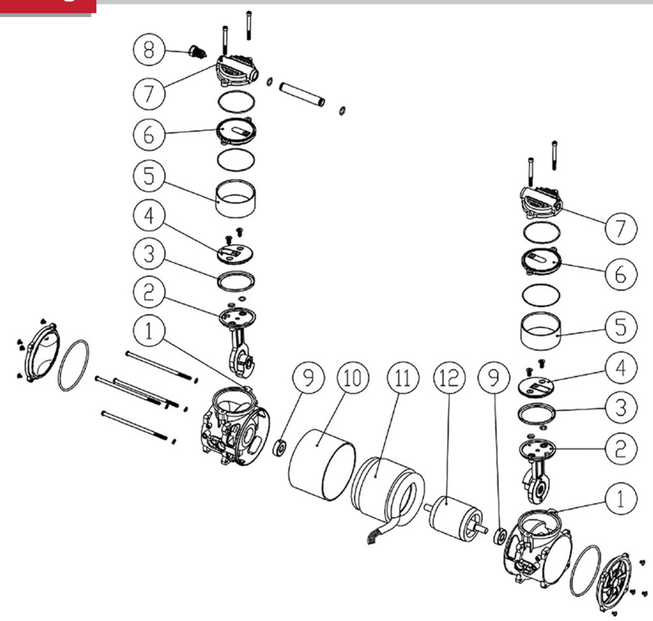

1.箱体 housing
2.连杆 connecting rod
3.皮碗cup seal
4.皮碗压盖 cup seal gland
5.缸套 cylinder liner
6.阀板 valve plate
7.缸盖 cylinder cover
8.安全阀 relief valve
9.轴承 bearing
10.电机筒 motor casing
11.定子 stator
12.转子 rotor

Dimensions

Two installation methods

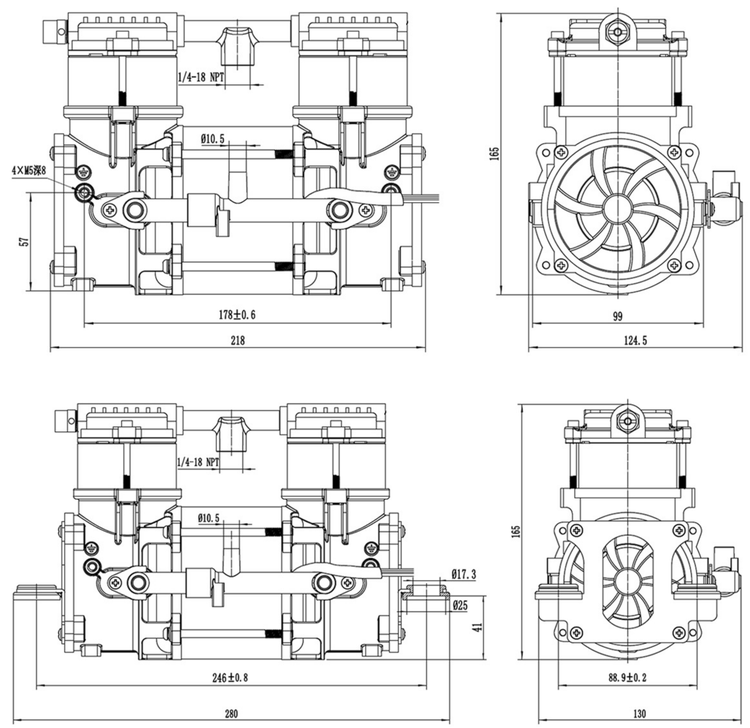

ZGK300P SERIES

AIR COMPRESSOR

ZGK300P系列

OIL-LESS

ZGK300P-47/2

Technical Data

Model Number	ZGK300P1-47/2	ZGK300P2-47/2
Performance Data		
Head configuration	Pressure parallel flow	Pressure parallel flow
Nominal voltage/frequency	110V/60Hz/1	220V/50Hz/1
Current at rated load	2.8 A	1.4 A
Power at rated load	280 W	270 W
Flow at rated load	47 L/min	47 L/min
Pressure at rated load	30 PSI (2.0 bar)	30 PSI (2.0 bar)
Speed at rated load	1650 rpm	1400 rpm
Noise	<55 dB(A)	<55 dB(A)
Maximum pressure restart	0 PSI	0 PSI
Electrical Data		
Motor type [Capacitance]	P.S.C(20uF)	P.S.C(8uF)
Motor insulation class	B	B
Thermal switch [Open temperature]	Thermally protected (145℃)	Thermally protected (145℃)
Line lead wire color, gauge	White(hot), black(neutral), 18 AWG	Brown(hot), blue(neutral), 18 AWG
Capacitor lead wire color, gauge	Blue, blue, 18 AWG	Black, black, 18 AWG
General Data		
Operating ambient air temperature	50° to 104°F (10° to 40℃)	50° to 104°F (10° to 40℃)
Safety certification	ETL	ETL
Net weight	4.4 Kg	4.4 Kg

※可按照需求提供其它电压及性能配置

Other voltages and configurations available upon request

Performance Chart

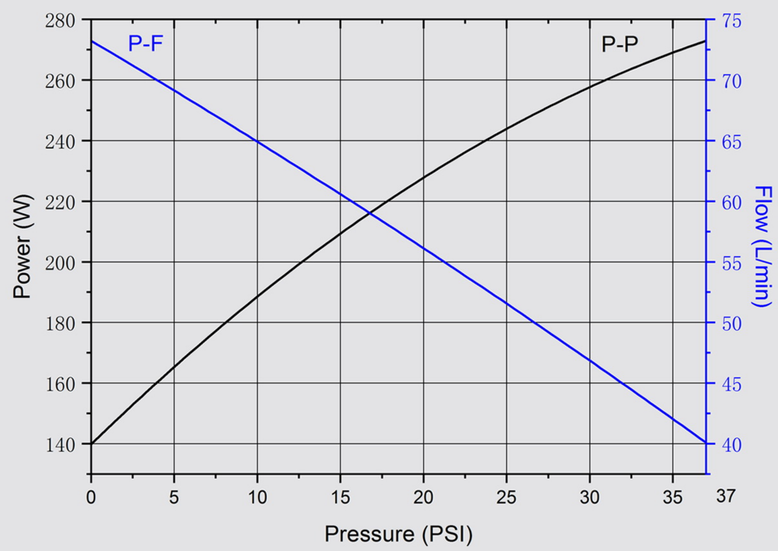

Exploded Drawing

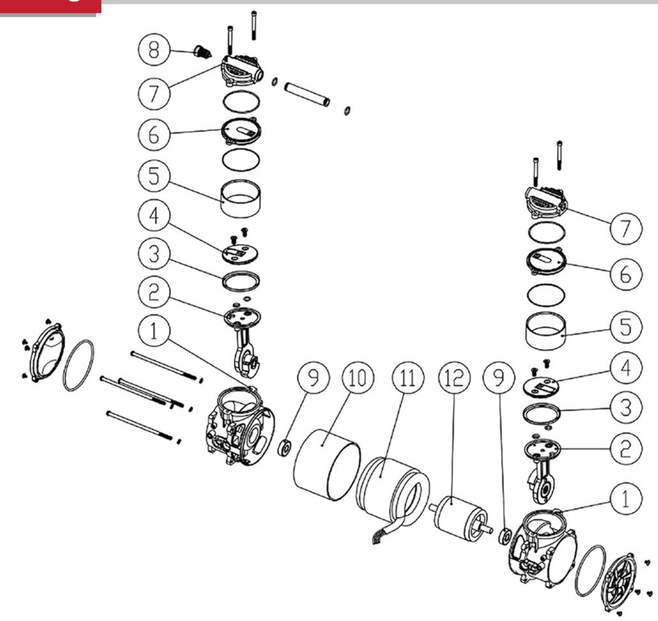

1.箱体 housing
2.连杆 connecting rod
3.皮碗cup seal
4.皮碗压盖 cup seal gland
5.缸套 cylinder liner
6.阀板 valve plate
7.缸盖 cylinder cover
8.安全阀 relief valve
9.轴承 bearing
10.电机筒 motor casing
11.定子 stator
12.转子 rotor

Dimensions

Two installation methods

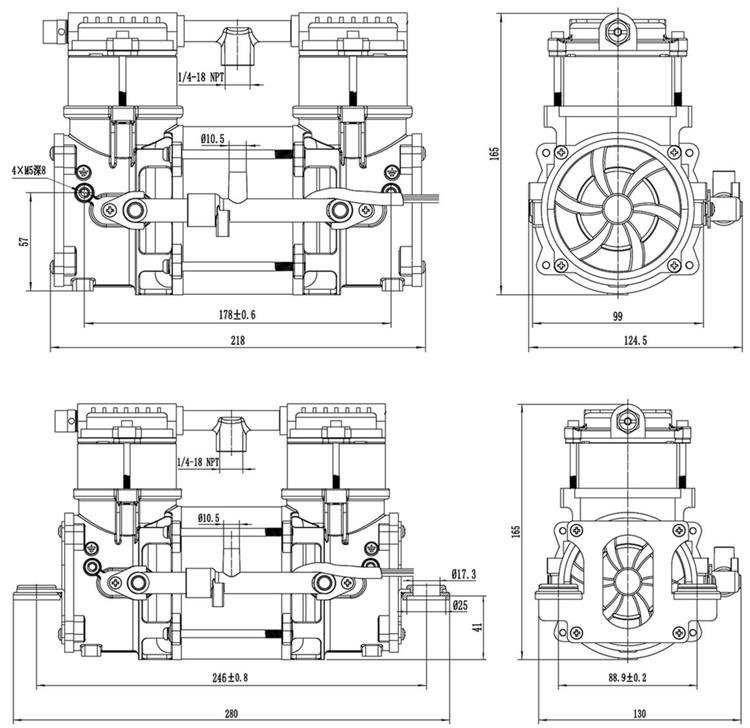

ZGK300P SERIES

AIR COMPRESSOR

ZGK300P系列

OIL-LESS

ZGK300P-68

Technical Data

Model Number	ZGK300P1-68	ZGK300P2-68
Performance Data		
Head configuration	Pressure parallel flow	Pressure parallel flow
Nominal voltage/frequency	110V/60Hz/1	220V/50Hz/1
Current at rated load	3.0 A	1.5 A
Power at rated load	310 W	300 W
Flow at rated load	68 L/min	68 L/min
Pressure at rated load	20 PSI (1.4 bar)	20 PSI (1.4 bar)
Speed at rated load	1650 rpm	1400 rpm
Noise	<55 dB(A)	<55 dB(A)
Maximum pressure restart	0 PSI	0 PSI
Electrical Data		
Motor type [Capacitance]	P.S.C(20uF)	P.S.C(8uF)
Motor insulation class	B	B
Thermal switch [Open temperature]	Thermally protected (145℃)	Thermally protected (145℃)
Line lead wire color, gauge	White(hot), black(neutral), 18 AWG	Brown(hot), blue(neutral), 18 AWG
Capacitor lead wire color, gauge	Blue, blue, 18 AWG	Black, black, 18 AWG
General Data		
Operating ambient air temperature	50° to 104°F (10° to 40℃)	50° to 104°F (10° to 40℃)
Safety certification	ETL	ETL
Net weight	4.4 Kg	4.4 Kg

※可按照需求提供其它电压及性能配置

Other voltages and configurations available upon request

Performance Chart

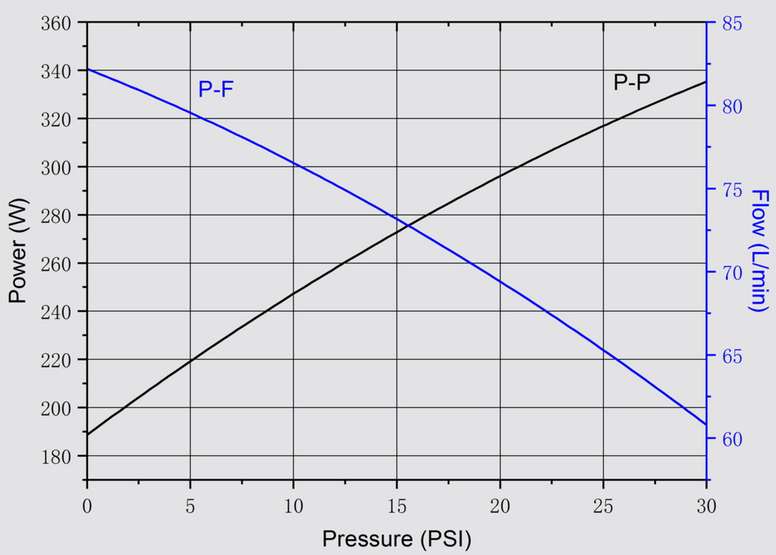

Exploded Drawing

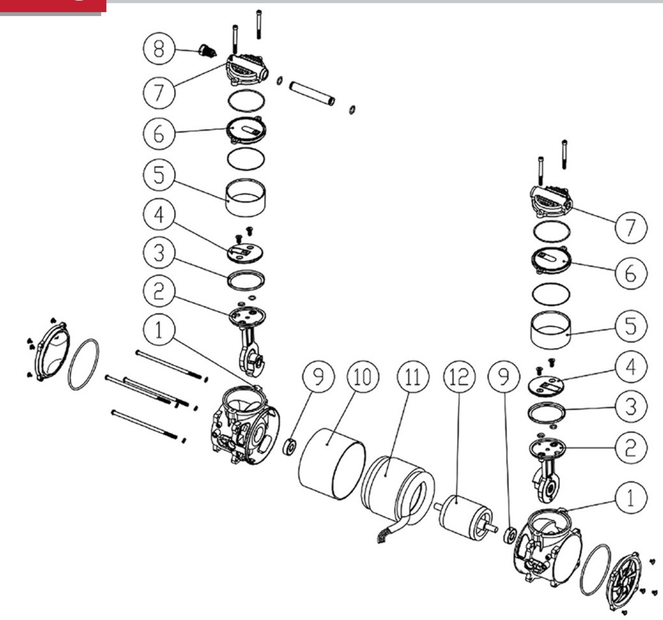

1.箱体 housing
2.连杆 connecting rod
3.皮碗cup seal
4.皮碗压盖 cup seal gland
5.缸套 cylinder liner
6.阀板 valve plate
7.缸盖 cylinder cover
8.安全阀 relief valve
9.轴承 bearing
10.电机筒 motor casing
11.定子 stator
12.转子 rotor

Dimensions

Two installation methods

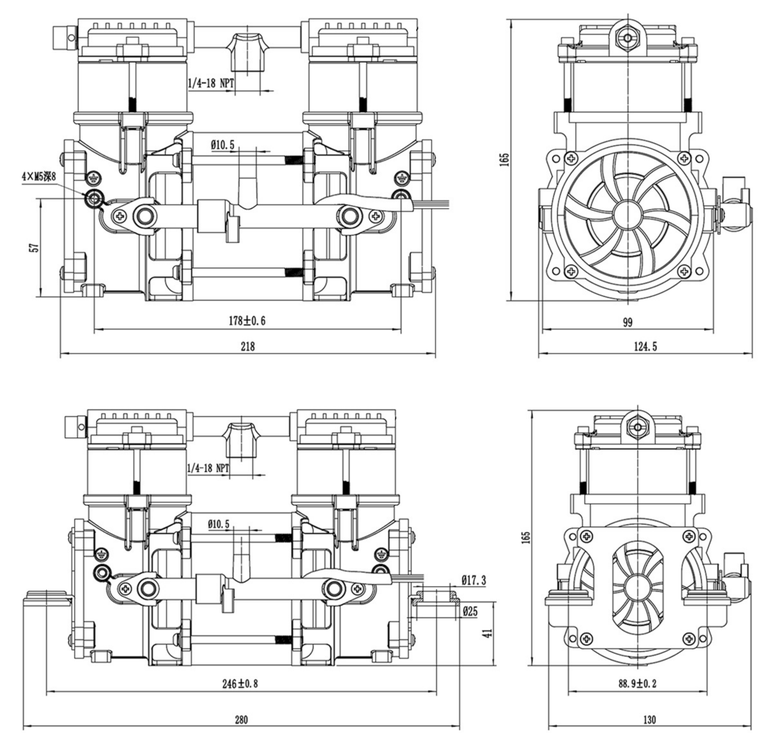

ZGK300P SERIES

AIR COMPRESSOR

ZGK300P系列

OIL-LESS

ZGK350P-68

Technical Data

Model Number	ZGK350P1-68	ZGK350P2-68
Performance Data		
Head configuration	Pressure parallel flow	Pressure parallel flow
Nominal voltage/frequency	110V/60Hz/1	220V/50Hz/1
Current at rated load	3.2 A	1.6 A
Power at rated load	320 W	310 W
Flow at rated load	68 L/min	68 L/min
Pressure at rated load	20 PSI (1.4 bar)	20 PSI (1.4 bar)
Speed at rated load	1650 rpm	1400 rpm
Noise	<55 dB(A)	<55 dB(A)
Maximum pressure restart	0 PSI	0 PSI
Electrical Data		
Motor type [Capacitance]	P.S.C(20uF)	P.S.C(8uF)
Motor insulation class	B	B
Thermal switch [Open temperature]	Thermally protected (145℃)	Thermally protected (145℃)
Line lead wire color, gauge	White(hot), black(neutral), 18 AWG	Brown(hot), blue(neutral), 18 AWG
Capacitor lead wire color, gauge	Blue, blue, 18 AWG	Black, black, 18 AWG
General Data		
Operating ambient air temperature	50° to 104°F (10° to 40℃)	50° to 104°F (10° to 40℃)
Safety certification	ETL	ETL
Net weight	4.9 Kg	4.9 Kg

※可按照需求提供其它电压及性能配置

Other voltages and configurations available upon request

Performance Chart

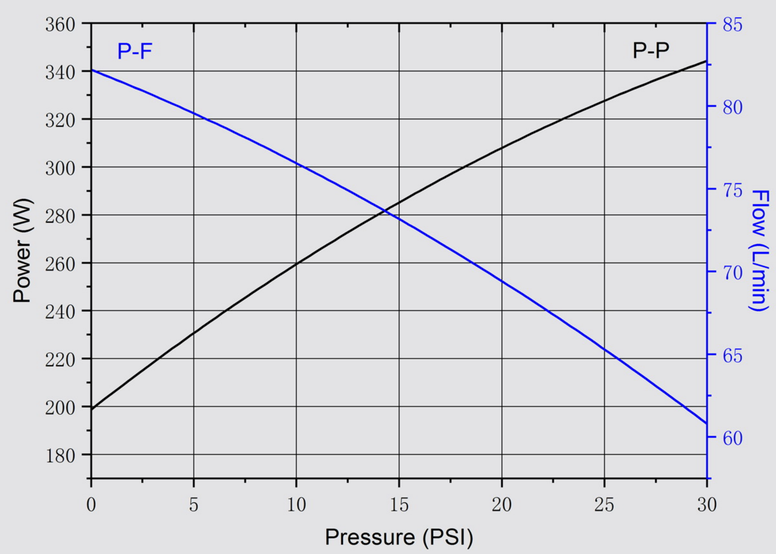

Exploded Drawing

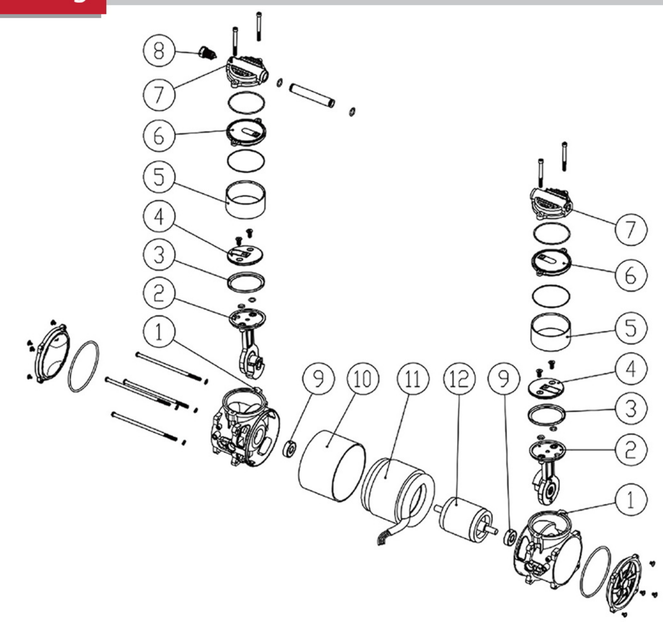

1.箱体 housing
2.连杆 connecting rod
3.皮碗cup seal
4.皮碗压盖 cup seal gland
5.缸套 cylinder liner
6.阀板 valve plate
7.缸盖 cylinder cover
8.安全阀 relief valve
9.轴承 bearing
10.电机筒 motor casing
11.定子 stator
12.转子 rotor

Dimensions

Two installation methods

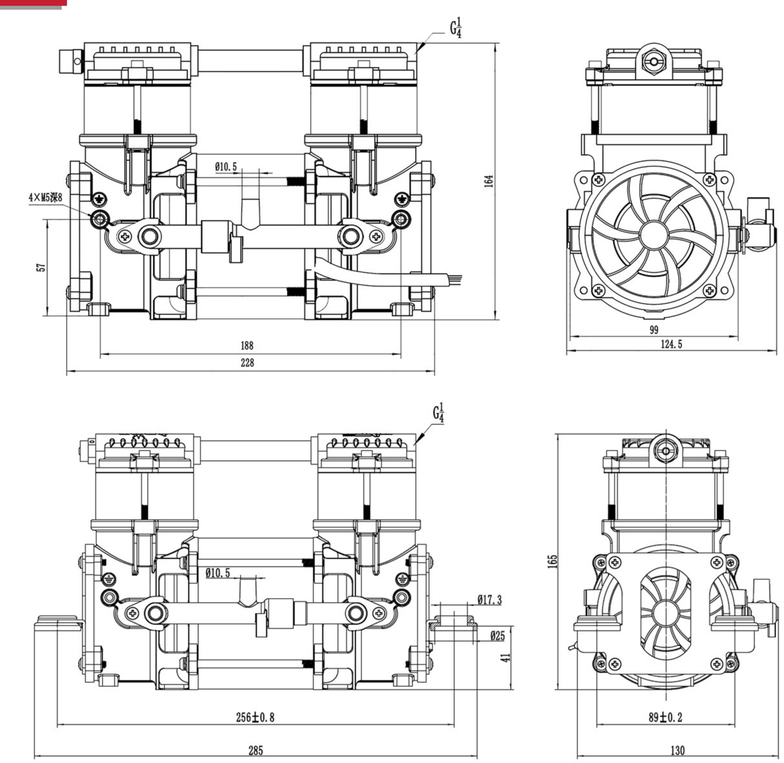

ZGK300P SERIES

AIR COMPRESSOR

ZGK300P系列

OIL-LESS

ZGK350P-75

Technical Data

Model Number	ZGK350P1-75	ZGK350P2-75
Performance Data		
Head configuration	Pressure parallel flow	Pressure parallel flow
Nominal voltage/frequency	110V/60Hz/1	220V/50Hz/1
Current at rated load	3.5 A	1.7 A
Power at rated load	360 W	350 W
Flow at rated load	75 L/min	75 L/min
Pressure at rated load	20 PSI (1.4 bar)	20 PSI (1.4 bar)
Speed at rated load	1650 rpm	1400 rpm
Noise	<55 dB(A)	<55 dB(A)
Maximum pressure restart	0 PSI	0 PSI
Electrical Data		
Motor type [Capacitance]	P.S.C(20uF)	P.S.C(8uF)
Motor insulation class	B	B
Thermal switch [Open temperature]	Thermally protected (145℃)	Thermally protected (145℃)
Line lead wire color, gauge	White(hot), black(neutral), 18 AWG	Brown(hot), blue(neutral), 18 AWG
Capacitor lead wire color, gauge	Blue, blue, 18 AWG	Black, black, 18 AWG
General Data		
Operating ambient air temperature	50° to 104°F (10° to 40℃)	50° to 104°F (10° to 40℃)
Safety certification	ETL	ETL
Net weight	4.9 Kg	4.9 Kg

※可按照需求提供其它电压及性能配置

Other voltages and configurations available upon request

Performance Chart

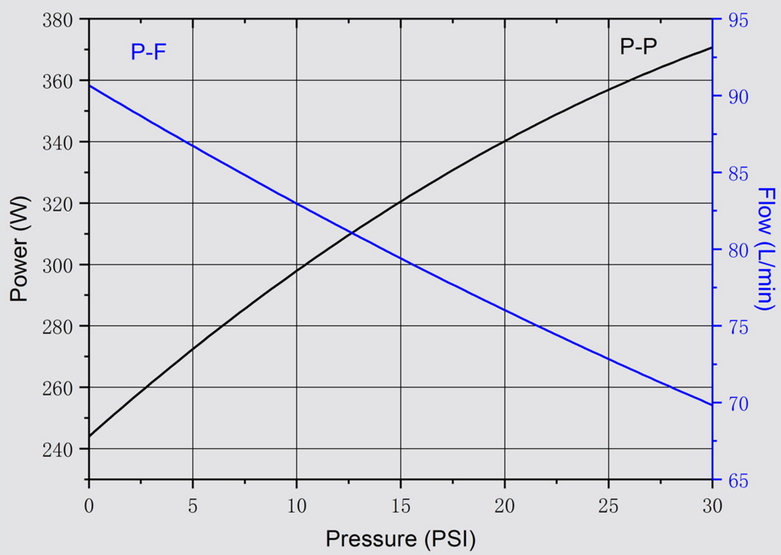

Exploded Drawing

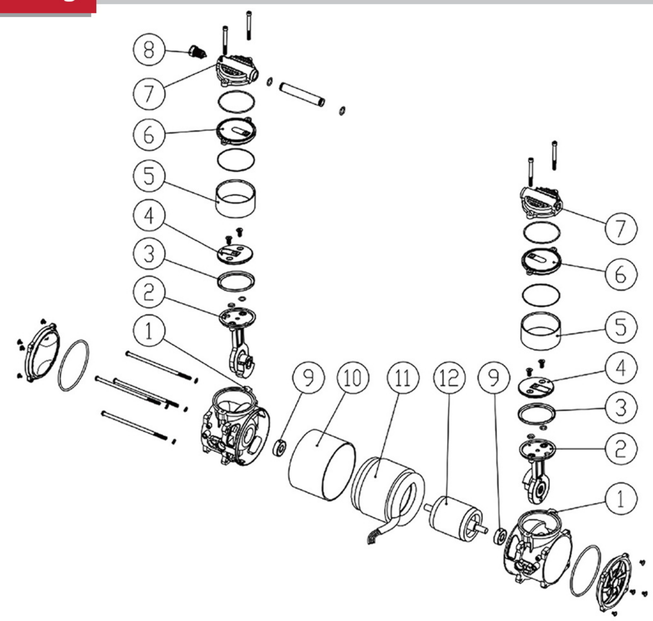

1.箱体 housing
2.连杆 connecting rod
3.皮碗cup seal
4.皮碗压盖 cup seal gland
5.缸套 cylinder liner
6.阀板 valve plate
7.缸盖 cylinder cover
8.安全阀 relief valve
9.轴承 bearing
10.电机筒 motor casing
11.定子 stator
12.转子 rotor

Dimensions

Two installation methods

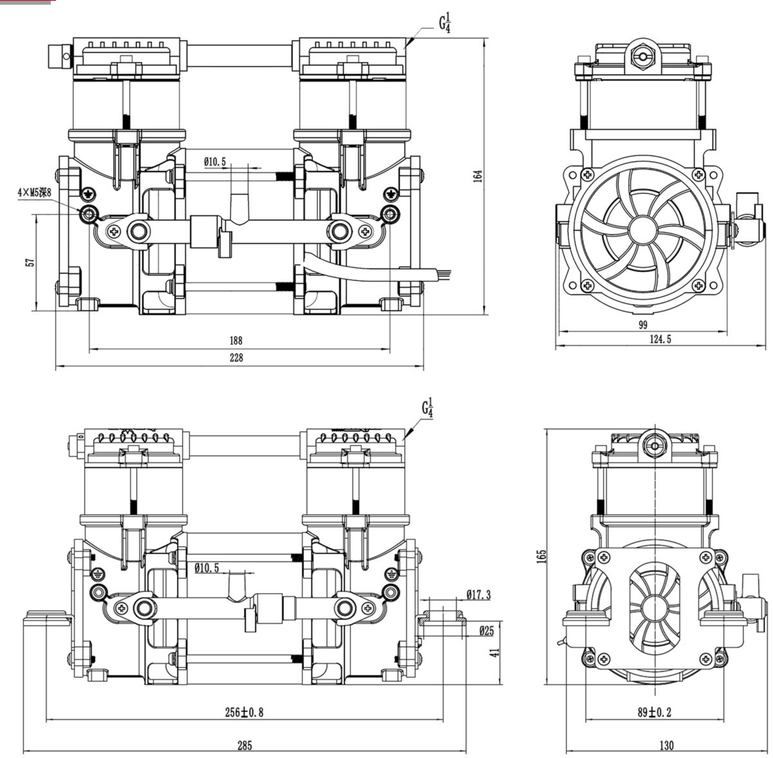

ZGK400P SERIES

AIR COMPRESSOR

ZGK400P系列

OIL-LESS

ZGK400P-75

Technical Data

Model Number	ZGK400P1-75	ZGK400P2-75
Performance Data		
Head configuration	Pressure parallel flow	Pressure parallel flow
Nominal voltage/frequency	110V/60Hz/1	220V/50Hz/1
Current at rated load	3.2 A	1.6 A
Power at rated load	330 W	320 W
Flow at rated load	75 L/min	75 L/min
Pressure at rated load	20 PSI (1.4 bar)	20 PSI (1.4 bar)
Speed at rated load	1650 rpm	1400 rpm
Noise	<58 dB(A)	<58 dB(A)
Maximum pressure restart	0 PSI	0 PSI
Electrical Data		
Motor type [Capacitance]	P.S.C(30uF)	P.S.C(10uF)
Motor insulation class	B	B
Thermal switch [Open temperature]	Thermally protected (145℃)	Thermally protected (145℃)
Line lead wire color, gauge	White(hot), black(neutral), 18 AWG	Brown(hot), blue(neutral), 18 AWG
Capacitor lead wire color, gauge	Blue, blue, 18 AWG	Black, black, 18 AWG
General Data		
Operating ambient air temperature	50° to 104°F (10° to 40℃)	50° to 104°F (10° to 40℃)
Safety certification	ETL	ETL
Net weight	6.5 Kg	6.5 Kg

※可按照需求提供其它电压及性能配置

Other voltages and configurations available upon request

Exploded Drawing

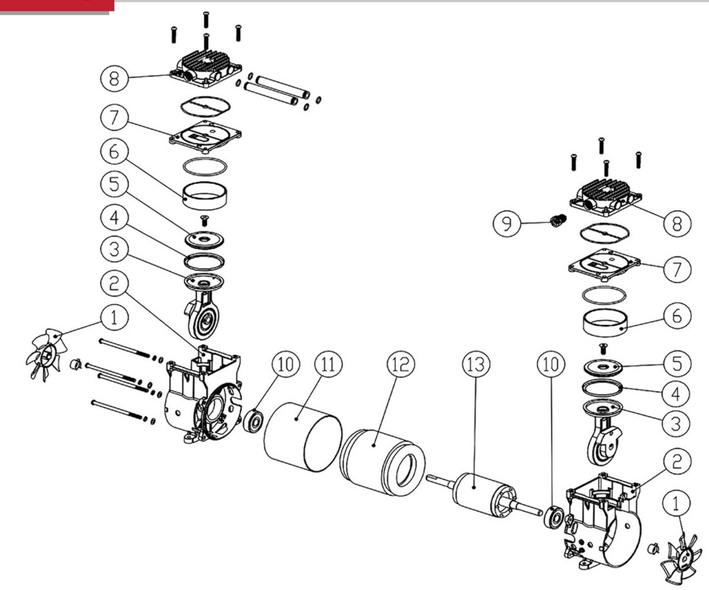

1.风扇 fan
2.箱体 housing
3.连杆 connecting rod
4.皮碗cup seal
5.皮碗压盖 cup seal gland
6.缸套cylinder liner
7.阀板valve plate
8.缸盖 cylinder cover
9.安全阀 relief valve
10.轴承 bearing
11.电机筒 motor casing
12.定子 stator
13.转子 rotor

Performance Chart

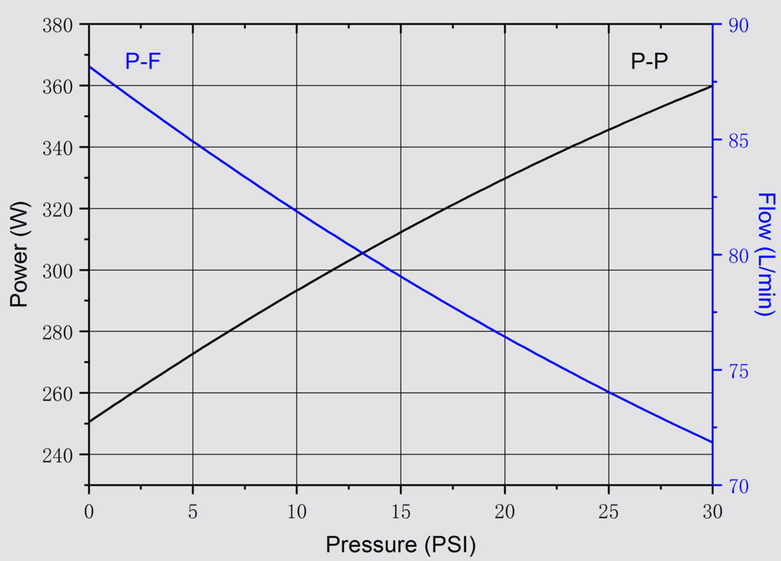

Dimensions

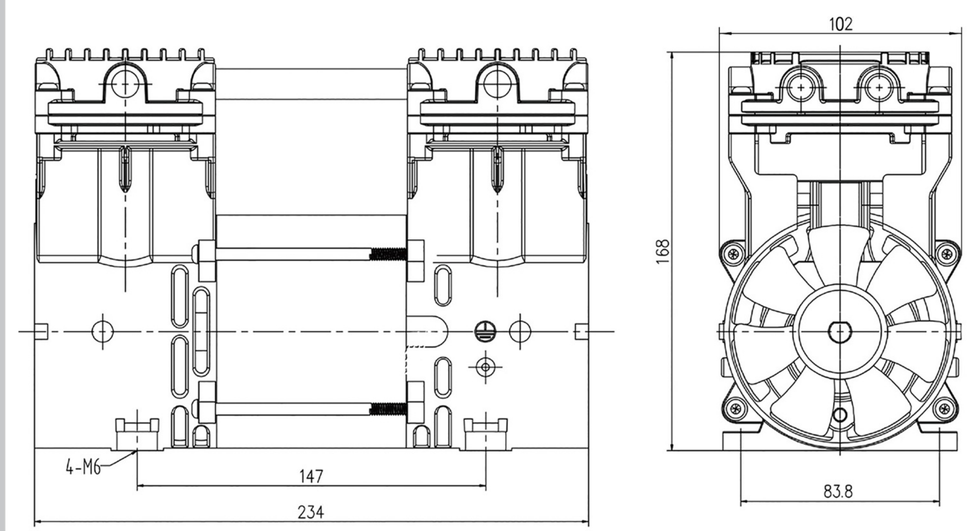

ZGK400P SERIES

AIR COMPRESSOR

ZGK400P系列

OIL-LESS

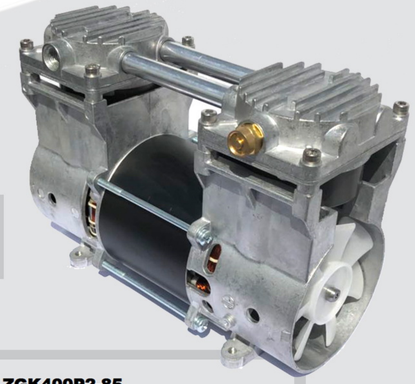

ZGK400P-85

Technical Data

Model Number	ZGK400P1-85	ZGK400P2-85
Performance Data		
Head configuration	Pressure parallel flow	Pressure parallel flow
Nominal voltage/frequency	110V/60Hz/1	220V/50Hz/1
Current at rated load	3.8 A	1.8 A
Power at rated load	390 W	380 W
Flow at rated load	85 L/min	85 L/min
Pressure at rated load	20 PSI (1.4 bar)	20 PSI (1.4 bar)
Speed at rated load	1650 rpm	1400 rpm
Noise	<58 dB(A)	<58 dB(A)
Maximum pressure restart	0 PSI	0 PSI
Electrical Data		
Motor type [Capacitance]	P.S.C(30uF)	P.S.C(10uF)
Motor insulation class	B	B
Thermal switch [Open temperature]	Thermally protected (145℃)	Thermally protected (145℃)
Line lead wire color, gauge	White(hot), black(neutral), 18 AWG	Brown(hot), blue(neutral), 18 AWG
Capacitor lead wire color, gauge	Blue, blue, 18 AWG	Black, black, 18 AWG
General Data		
Operating ambient air temperature	50° to 104°F (10° to 40℃)	50° to 104°F (10° to 40℃)
Safety certification	ETL	ETL
Net weight	6.5 Kg	6.5 Kg

※可按照需求提供其它电压及性能配置

Other voltages and configurations available upon request

Exploded Drawing

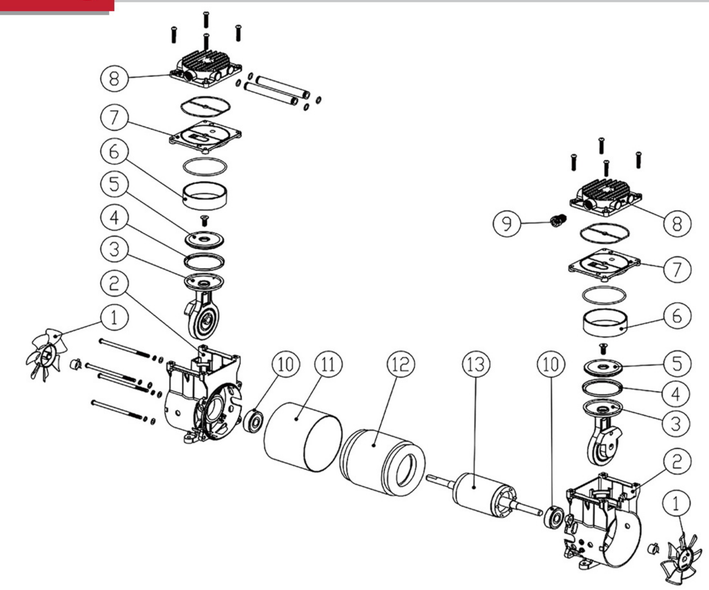

1.风扇 fan
2.箱体 housing
3.连杆 connecting rod
4.皮碗cup seal
5.皮碗压盖 cup seal gland
6.缸套cylinder liner
7.阀板valve plate
8.缸盖 cylinder cover
9.安全阀 relief valve
10.轴承 bearing
11.电机筒 motor casing
12.定子 stator
13.转子 rotor

Performance Chart

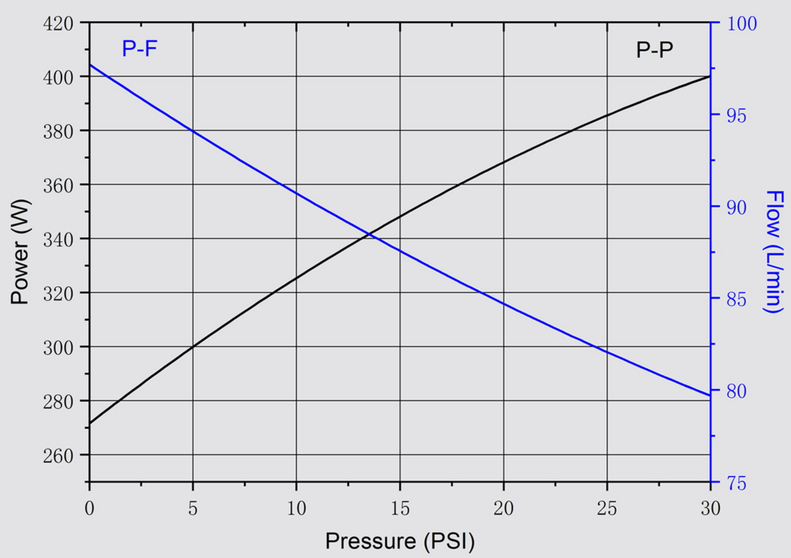

Dimensions

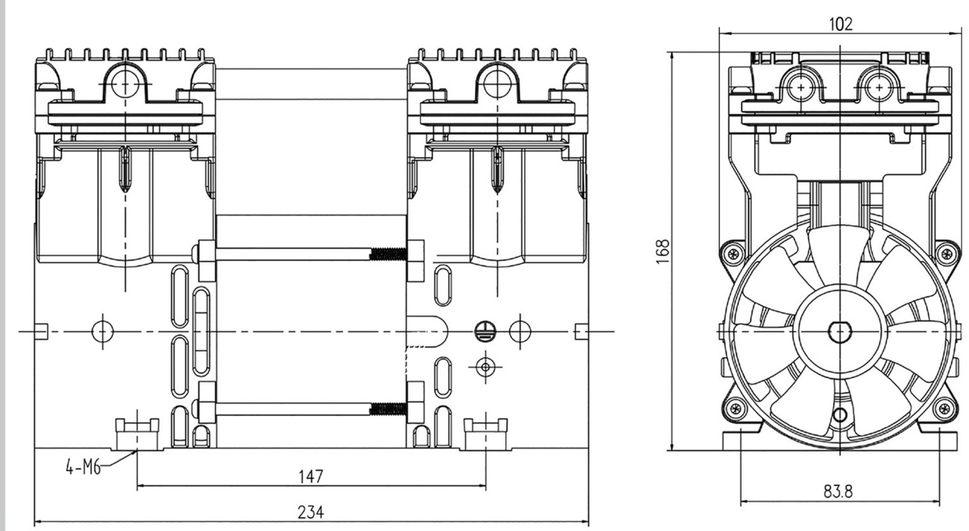

ZGK400P SERIES

AIR COMPRESSOR

ZGK400P系列

OIL-LESS

ZGK400P-50/2

Technical Data

Model Number	ZGK400P1-50/2	ZGK400P2-50/2
Performance Data		
Head configuration	Pressure parallel flow	Pressure parallel flow
Nominal voltage/frequency	110V/60Hz/1	220V/50Hz/1
Current at rated load	3.1 A	1.55 A
Power at rated load	320 W	310 W
Flow at rated load	50 L/min	50 L/min
Pressure at rated load	30 PSI (2.0 bar)	30 PSI (2.0 bar)
Speed at rated load	1650 rpm	1400 rpm
Noise	<58 dB(A)	<58 dB(A)
Maximum pressure restart	0 PSI	0 PSI
Electrical Data		
Motor type [Capacitance]	P.S.C(20uF)	P.S.C(8uF)
Motor insulation class	B	B
Thermal switch [Open temperature]	Thermally protected (145℃)	Thermally protected (145℃)
Line lead wire color, gauge	White(hot), black(neutral), 18 AWG	Brown(hot), blue(neutral), 18 AWG
Capacitor lead wire color, gauge	Blue, blue, 18 AWG	Black, black, 18 AWG
General Data		
Operating ambient air temperature	50° to 104°F (10° to 40℃)	50° to 104°F (10° to 40℃)
Safety certification	ETL	ETL
Net weight	6.0 Kg	6.0 Kg

※可按照需求提供其它电压及性能配置

Other voltages and configurations available upon request

Exploded Drawing

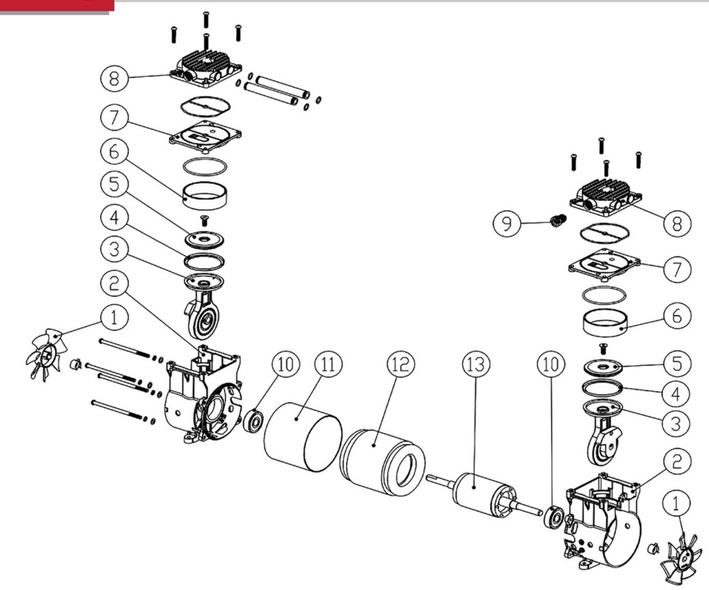

1.风扇 fan
2.箱体 housing
3.连杆 connecting rod
4.皮碗cup seal
5.皮碗压盖 cup seal gland
6.缸套cylinder liner
7.阀板valve plate
8.缸盖 cylinder cover
9.安全阀 relief valve
10.轴承 bearing
11.电机筒 motor casing
12.定子 stator
13.转子 rotor

Performance Chart

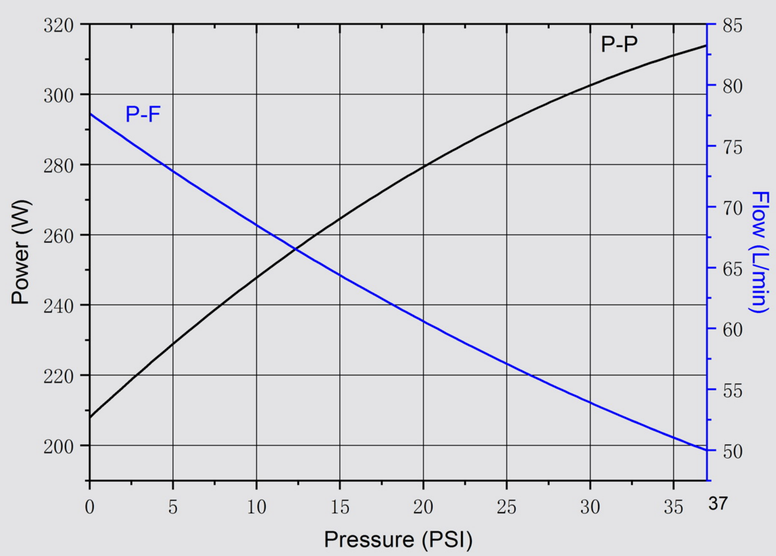

Dimensions

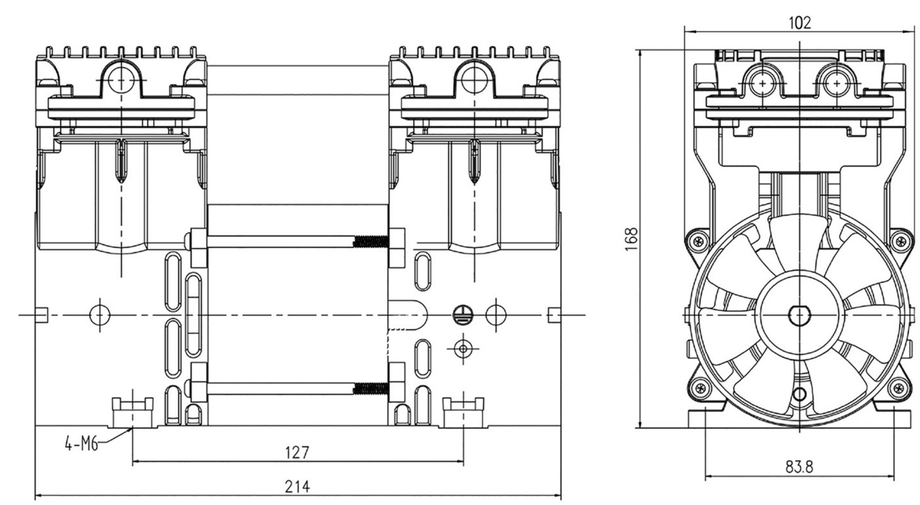

ZGK400P SERIES

AIR COMPRESSOR

ZGK400P系列

OIL-LESS

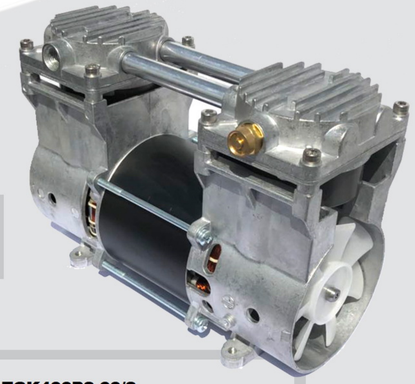

ZGK400P-60/2

Technical Data

Model Number	ZGK400P1-60/2	ZGK400P2-60/2
Performance Data		
Head configuration	Pressure parallel flow	Pressure parallel flow
Nominal voltage/frequency	110V/60Hz/1	220V/50Hz/1
Current at rated load	3.3 A	1.65 A
Power at rated load	350 W	340 W
Flow at rated load	60 L/min	60 L/min
Pressure at rated load	30 PSI (2.0 bar)	30 PSI (2.0 bar)
Speed at rated load	1650 rpm	1400 rpm
Noise	<58 dB(A)	<58 dB(A)
Maximum pressure restart	0 PSI	0 PSI
Electrical Data		
Motor type [Capacitance]	P.S.C(30uF)	P.S.C(10uF)
Motor insulation class	B	B
Thermal switch [Open temperature]	Thermally protected (145℃)	Thermally protected (145℃)
Line lead wire color, gauge	White(hot), black(neutral), 18 AWG	Brown(hot), blue(neutral), 18 AWG
Capacitor lead wire color, gauge	Blue, blue, 18 AWG	Black, black, 18 AWG
General Data		
Operating ambient air temperature	50° to 104°F (10° to 40℃)	50° to 104°F (10° to 40℃)
Safety certification	ETL	ETL
Net weight	6.5 Kg	6.5 Kg

※可按照需求提供其它电压及性能配置

Other voltages and configurations available upon request

Exploded Drawing

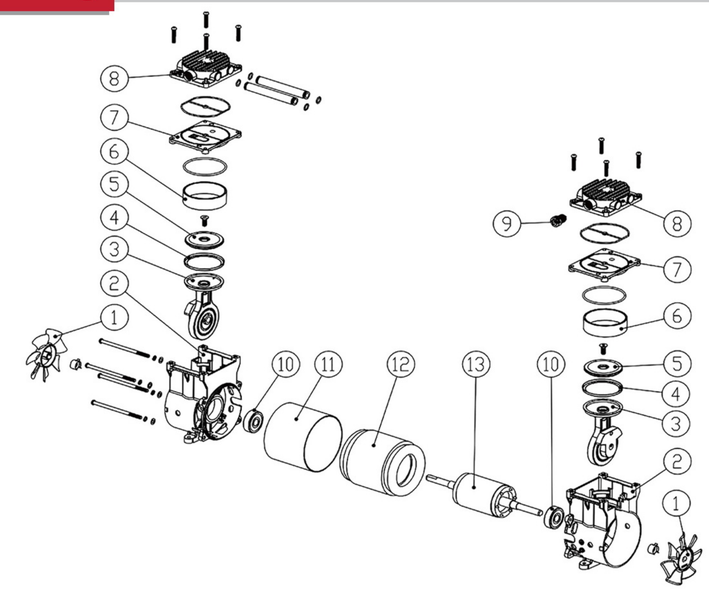

1.风扇 fan
2.箱体 housing
3.连杆 connecting rod
4.皮碗cup seal
5.皮碗压盖 cup seal gland
6.缸套cylinder liner
7.阀板valve plate
8.缸盖 cylinder cover
9.安全阀 relief valve
10.轴承 bearing
11.电机筒 motor casing
12.定子 stator
13.转子 rotor

Performance Chart

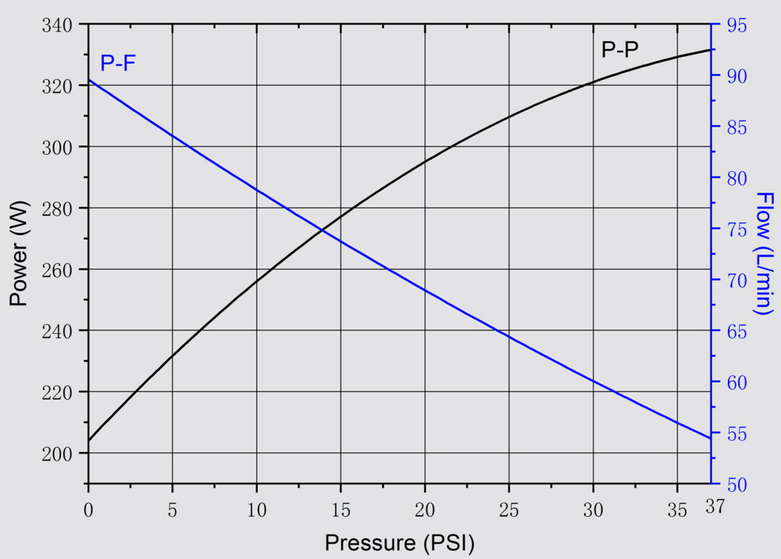

Dimensions

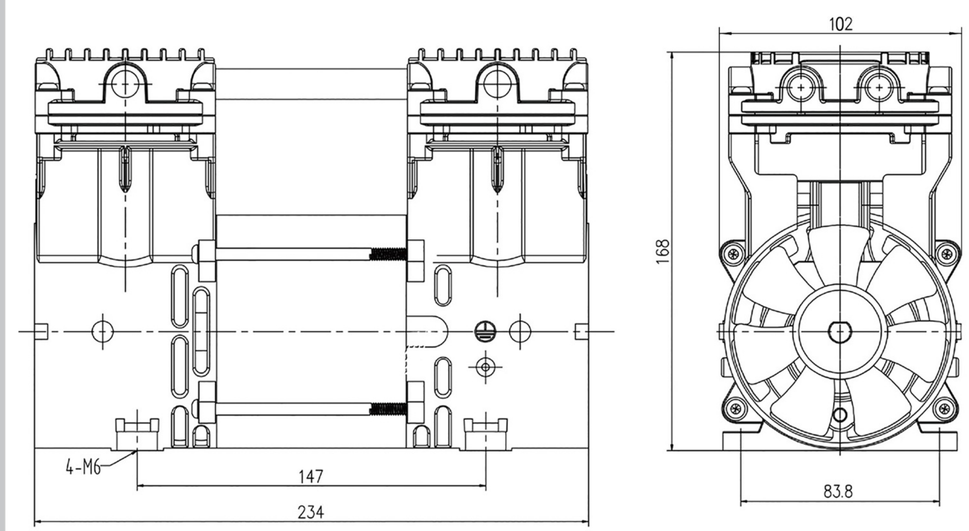

ZGK400P SERIES

AIR COMPRESSOR

ZGK400P系列

OIL-LESS

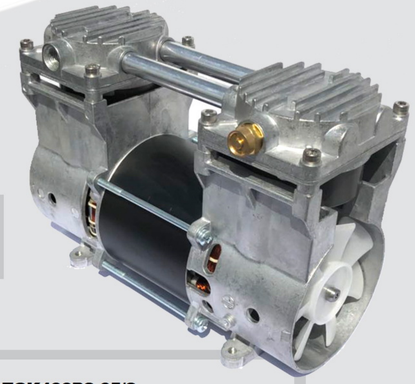

ZGK400P-65/2

Technical Data

Model Number	ZGK400P1-65/2	ZGK400P2-65/2
Performance Data		
Head configuration	Pressure parallel flow	Pressure parallel flow
Nominal voltage/frequency	110V/60Hz/1	220V/50Hz/1
Current at rated load	3.5 A	1.75 A
Power at rated load	370 W	360 W
Flow at rated load	65 L/min	65 L/min
Pressure at rated load	30 PSI (2.0 bar)	30 PSI (2.0 bar)
Speed at rated load	1650 rpm	1400 rpm
Noise	<58 dB(A)	<58 dB(A)
Maximum pressure restart	0 PSI	0 PSI
Electrical Data		
Motor type [Capacitance]	P.S.C(30uF)	P.S.C(10uF)
Motor insulation class	B	B
Thermal switch [Open temperature]	Thermally protected (145℃)	Thermally protected (145℃)
Line lead wire color, gauge	White(hot), black(neutral), 18 AWG	Brown(hot), blue(neutral), 18 AWG
Capacitor lead wire color, gauge	Blue, blue, 18 AWG	Black, black, 18 AWG
General Data		
Operating ambient air temperature	50° to 104°F (10° to 40℃)	50° to 104°F (10° to 40℃)
Safety certification	ETL	ETL
Net weight	6.5 Kg	6.5 Kg

※可按照需求提供其它电压及性能配置

Other voltages and configurations available upon request

Exploded Drawing

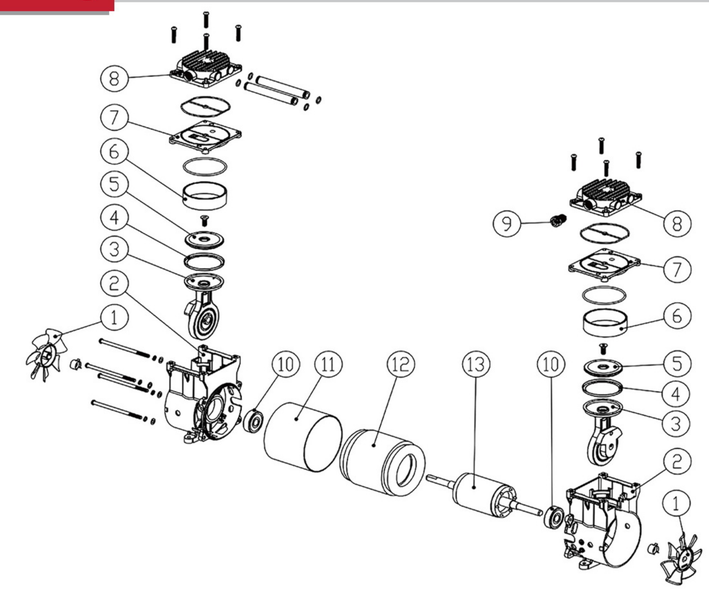

1.风扇 fan
2.箱体 housing
3.连杆 connecting rod
4.皮碗cup seal
5.皮碗压盖 cup seal gland
6.缸套cylinder liner
7.阀板valve plate
8.缸盖 cylinder cover
9.安全阀 relief valve
10.轴承 bearing
11.电机筒 motor casing
12.定子 stator
13.转子 rotor

Performance Chart

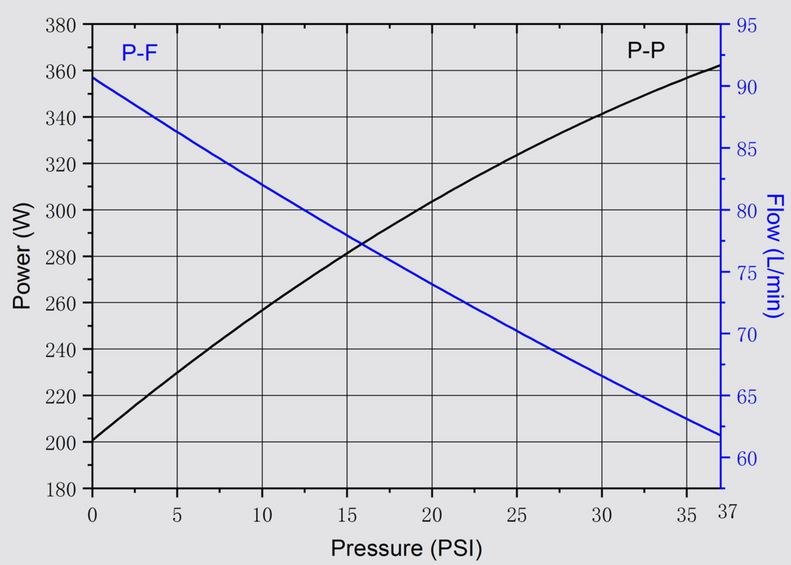

Dimensions

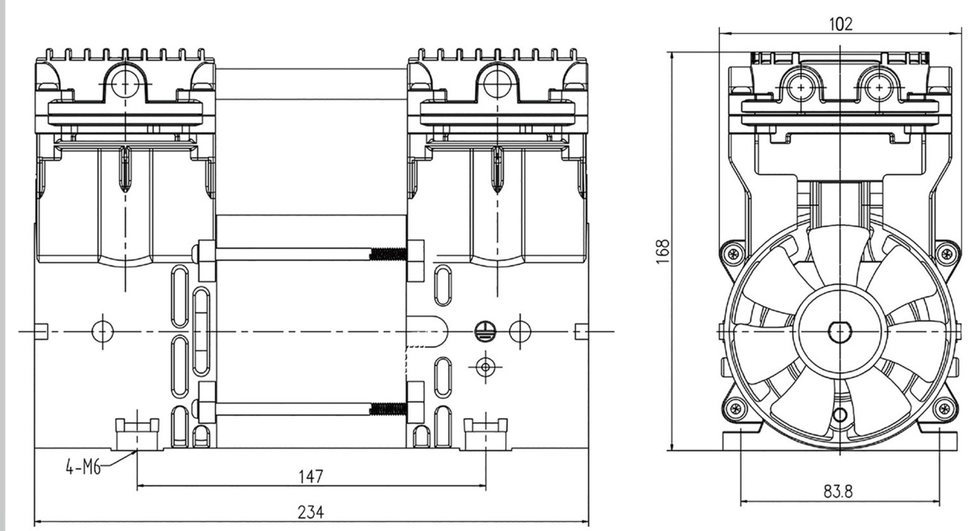

ZGK400P SERIES

AIR COMPRESSOR

ZGK400P系列

OIL-LESS

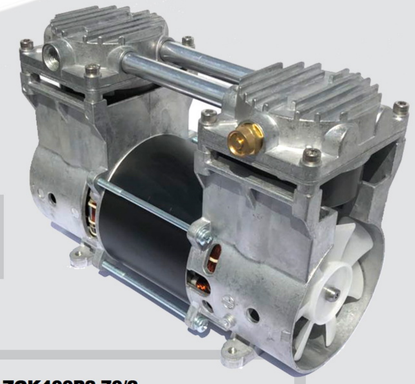

ZGK400P-70/2

Technical Data

Model Number	ZGK400P1-70/2	ZGK400P2-70/2
Performance Data		
Head configuration	Pressure parallel flow	Pressure parallel flow
Nominal voltage/frequency	110V/60Hz/1	220V/50Hz/1
Current at rated load	3.6 A	1.8 A
Power at rated load	390 W	375 W
Flow at rated load	70 L/min	70 L/min
Pressure at rated load	30 PSI (2.0 bar)	30 PSI (2.0 bar)
Speed at rated load	1650 rpm	1400 rpm
Noise	<58 dB(A)	<58 dB(A)
Maximum pressure restart	0 PSI	0 PSI
Electrical Data		
Motor type [Capacitance]	P.S.C(30uF)	P.S.C(10uF)
Motor insulation class	B	B
Thermal switch [Open temperature]	Thermally protected (145℃)	Thermally protected (145℃)
Line lead wire color, gauge	White(hot), black(neutral), 18 AWG	Brown(hot), blue(neutral), 18 AWG
Capacitor lead wire color, gauge	Blue, blue, 18 AWG	Black, black, 18 AWG
General Data		
Operating ambient air temperature	50° to 104°F (10° to 40℃)	50° to 104°F (10° to 40℃)
Safety certification	ETL	ETL
Net weight	6.5 Kg	6.5 Kg

※可按照需求提供其它电压及性能配置

Other voltages and configurations available upon request

Exploded Drawing

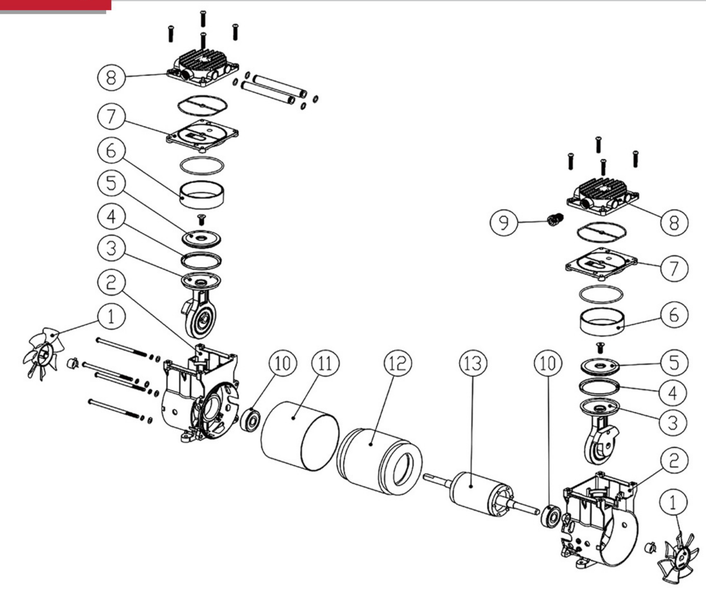

1.风扇 fan
2.箱体 housing
3.连杆 connecting rod
4.皮碗cup seal
5.皮碗压盖 cup seal gland
6.缸套cylinder liner
7.阀板valve plate
8.缸盖 cylinder cover
9.安全阀 relief valve
10.轴承 bearing
11.电机筒 motor casing
12.定子 stator
13.转子 rotor

Performance Chart

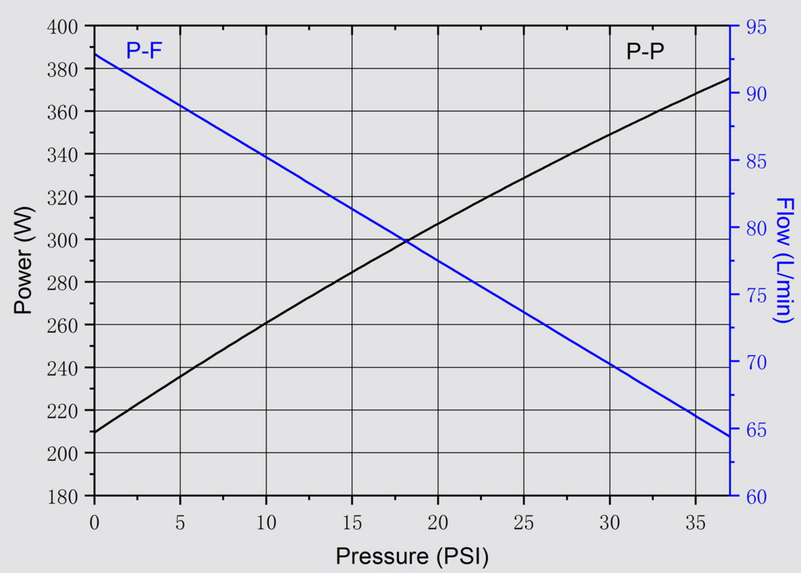

Dimensions

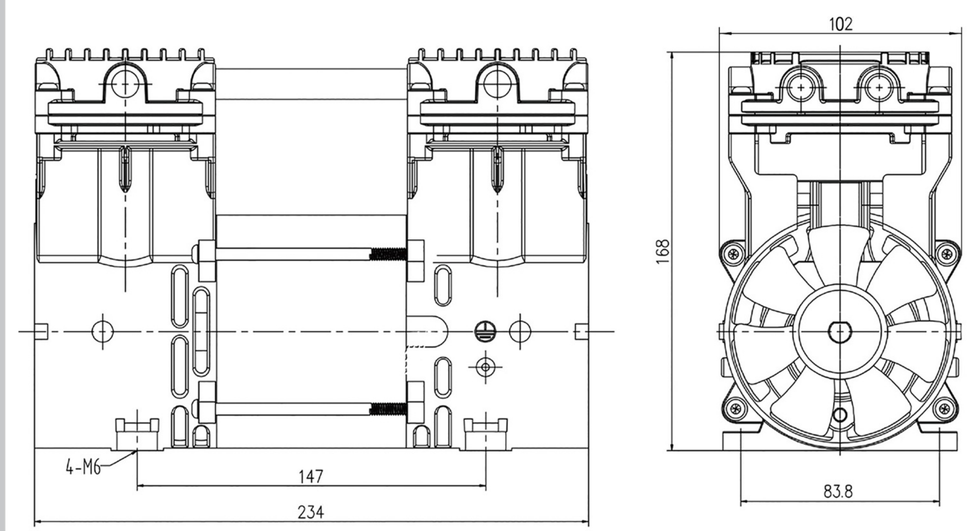

ZGK400P SERIES

AIR COMPRESSOR

ZGK400P系列

OIL-LESS

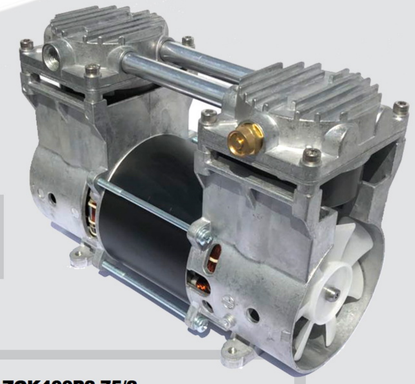

ZGK400P-75/2

Technical Data

Model Number	ZGK400P1-75/2	ZGK400P2-75/2
Performance Data		
Head configuration	Pressure parallel flow	Pressure parallel flow
Nominal voltage/frequency	110V/60Hz/1	220V/50Hz/1
Current at rated load	4.1 A	1.9 A
Power at rated load	400 W	390 W
Flow at rated load	75 L/min	75 L/min
Pressure at rated load	30 PSI (2.0 bar)	30 PSI (2.0 bar)
Speed at rated load	1650 rpm	1400 rpm
Noise	<58 dB(A)	<58 dB(A)
Maximum pressure restart	0 PSI	0 PSI
Electrical Data		
Motor type [Capacitance]	P.S.C(30uF)	P.S.C(10uF)
Motor insulation class	B	B
Thermal switch [Open temperature]	Thermally protected (145℃)	Thermally protected (145℃)
Line lead wire color, gauge	White(hot), black(neutral), 18 AWG	Brown(hot), blue(neutral), 18 AWG
Capacitor lead wire color, gauge	Blue, blue, 18 AWG	Black, black, 18 AWG
General Data		
Operating ambient air temperature	50° to 104°F (10° to 40℃)	50° to 104°F (10° to 40℃)
Safety certification	ETL	ETL
Net weight	6.5 Kg	6.5 Kg

※可按照需求提供其它电压及性能配置

Other voltages and configurations available upon request

Exploded Drawing

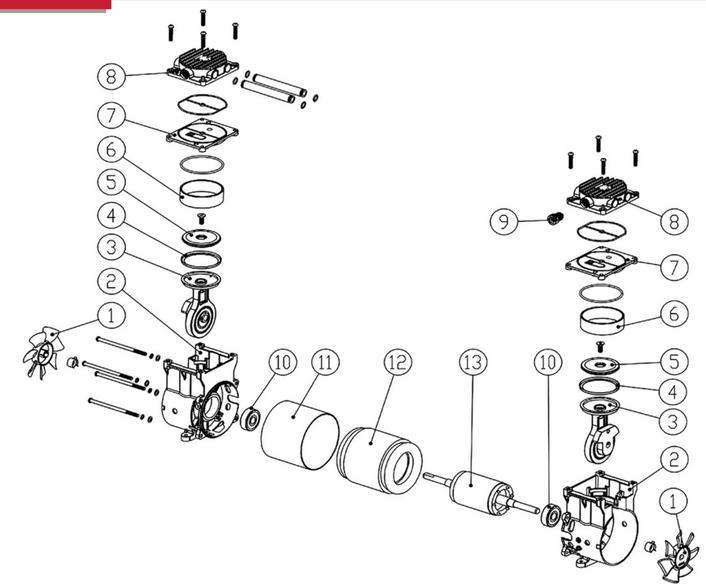

1.风扇 fan
2.箱体 housing
3.连杆 connecting rod
4.皮碗cup seal
5.皮碗压盖 cup seal gland
6.缸套cylinder liner
7.阀板valve plate
8.缸盖 cylinder cover
9.安全阀 relief valve
10.轴承 bearing
11.电机筒 motor casing
12.定子 stator
13.转子 rotor

Performance Chart

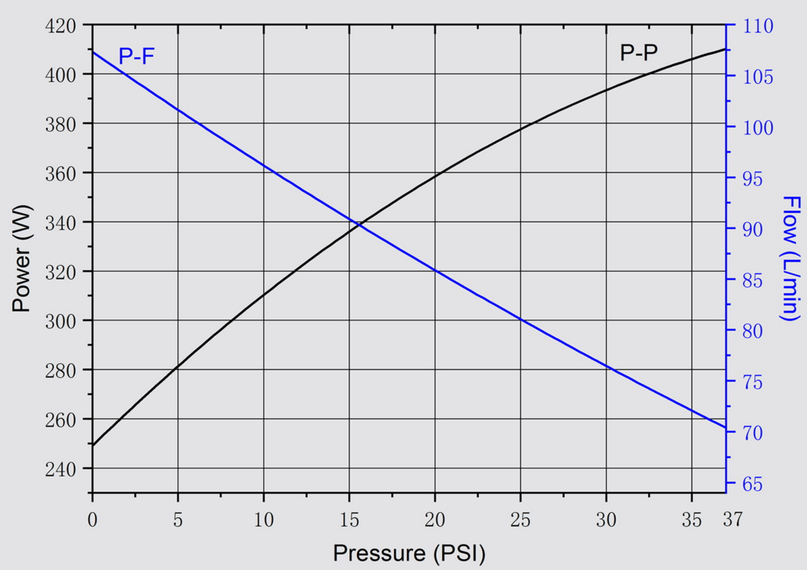

Dimensions

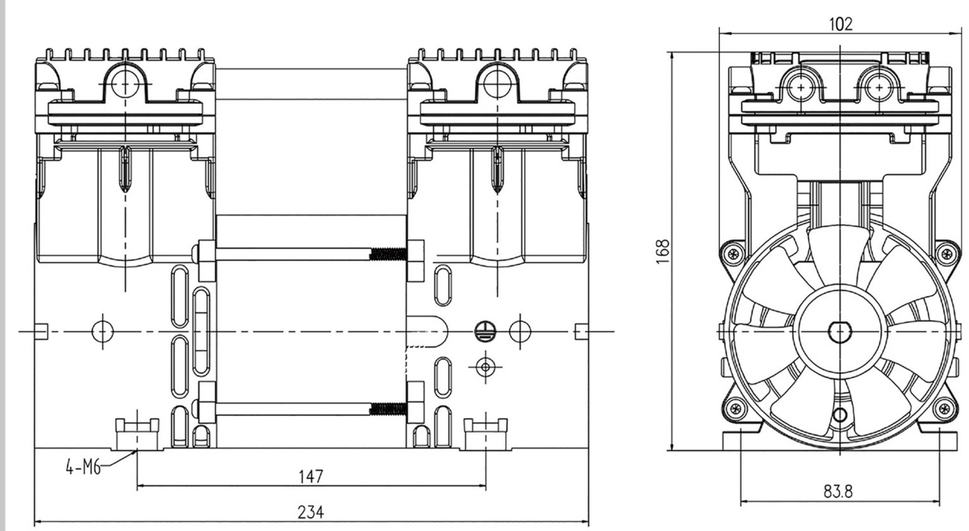

ZGK500P SERIES

AIR COMPRESSOR

ZGK500P系列

OIL-LESS

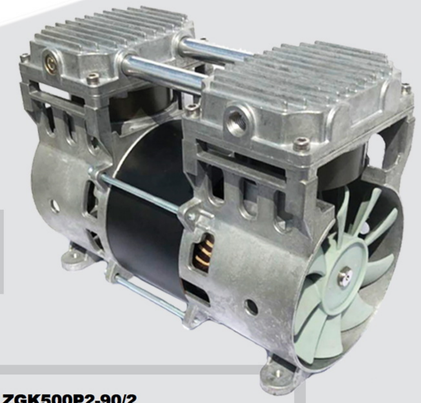

ZGK500P-90/2

Technical Data

Model Number	ZGK500P1-90/2	ZGK500P2-90/2
Performance Data		
Head configuration	Pressure parallel flow	Pressure parallel flow
Nominal voltage/frequency	110V/60Hz/1	220V/50Hz/1
Current at rated load	4.7 A	2.3 A
Power at rated load	490 W	480 W
Flow at rated load	90 L/min	90 L/min
Pressure at rated load	30 PSI (2.0 bar)	30 PSI (2.0 bar)
Speed at rated load	1650 rpm	1400 rpm
Noise	<60 dB(A)	<60 dB(A)
Maximum pressure restart	0 PSI	0 PSI
Electrical Data		
Motor type [Capacitance]	P.S.C(25uF)	P.S.C(12uF)
Motor insulation class	B	B
Thermal switch [Open temperature]	Thermally protected (145℃)	Thermally protected (145℃)
Line lead wire color, gauge	White(hot), black(neutral), 18 AWG	Brown(hot), blue(neutral), 18 AWG
Capacitor lead wire color, gauge	Blue, blue, 18 AWG	Black, black, 18 AWG
General Data		
Operating ambient air temperature	50° to 104°F (10° to 40℃)	50° to 104°F (10° to 40℃)
Safety certification	ETL	ETL
Net weight	8.5 Kg	8.5 Kg

※可按照需求提供其它电压及性能配置

Other voltages and configurations available upon request

Exploded Drawing

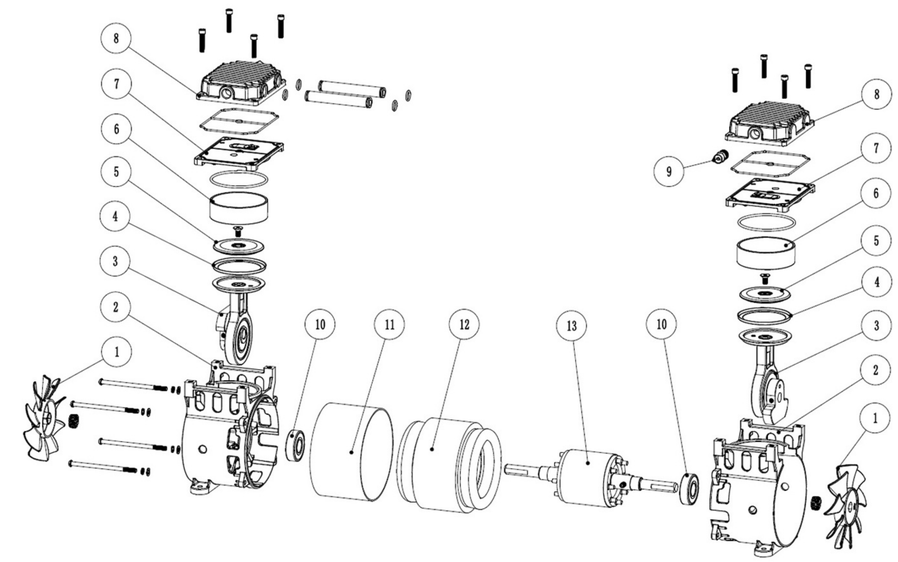

1.风扇 fan
2.箱体 housing
3.连杆 connecting rod
4.皮碗cup seal
5.皮碗压盖 cup seal gland
6.缸套cylinder liner
7.阀板valve plate
8.缸盖 cylinder cover
9.安全阀 relief valve
10.轴承 bearing
11.电机筒 motor casing
12.定子 stator
13.转子 rotor

Performance Chart

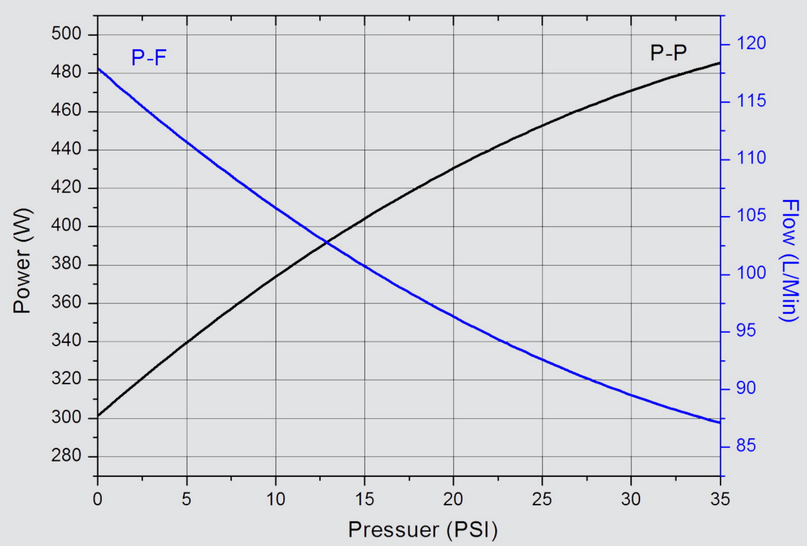
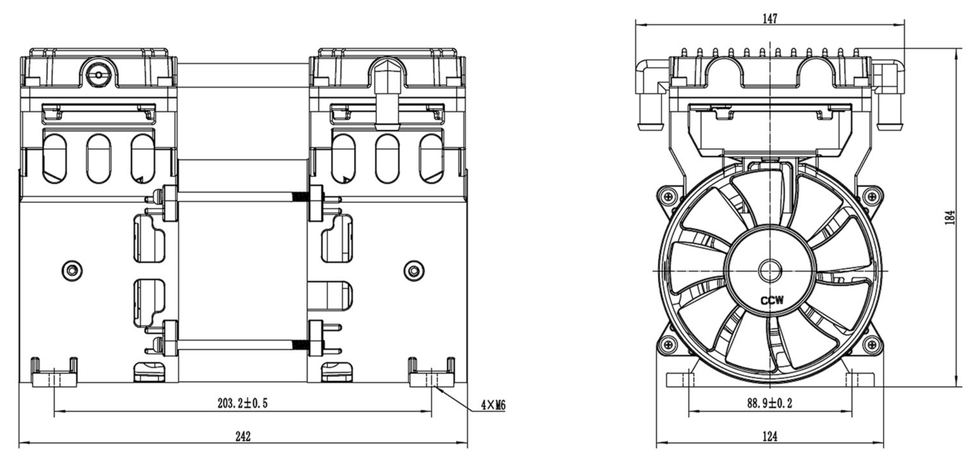
Dimensions